COMMAND LINE INTERFACE, FREQUENTLY USED COMMANDS

COMMAND	DESCRIPTION / USE
?	Displays the system's present status.
H[ELP]	Displays the list of all commands available in a Telnet session with a short description.

Refer to the User Manual for more commands and more detailed information.

SMX MODULES

Both SMX modules share the same pin out for their respective J1-POWER and J2-MODBUS connectors. Refer to the following SMX-24AI figure for Power and MODBUS wiring. Up to 32 MODBUS modules can be network on each FUSION's EIA-485 port for a total of 64 modules. The SMX communication speed and module address are configured using the rotary switches on the front panel. The SMX "SPEED" rotary switch correspondence is as follow:
1 = 1200; 2=2400; 3=4800; 4=9600; 5=19,2k; 6=38,4k; 7=57,6k and 8=115,2k (default)

SMX-48BI

The SMX-48BI offers 48 single ended binary input on the J3- ALARM 50-pin CHAMP style connector. The below figure provide the channel and pinout cross-reference.

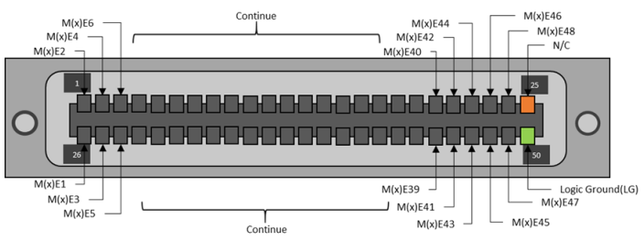

SMX-24AI

A scale value must be programmed for each analog input channel using the analog command. See the following table for typical values.

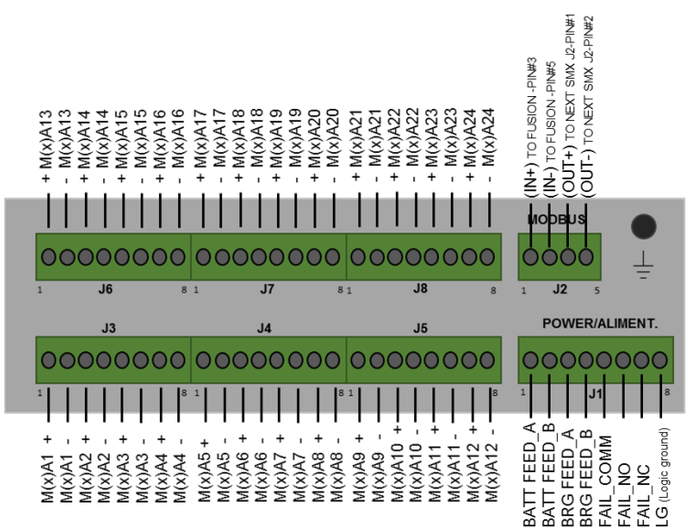

FRONT END	TRANSDUCER	SCALE
65Vdc	Not applicable	65
23Vrms	SDTA-01 (240Vac)	2680
	SDTA-02 (240Vac / 600Vac)	2680 / 6700
1.4Vrms	Current Transducer (0-50Aac)	595
	Current Transducer (0-100Aac)	1189
	Current Transducer (0-200Aac)	2378
	Current Transducer (0-400Aac)	4757
	Current Transducer (0-600Aac)	7135
	Current Transducer (0-1500Aac)	17835
	Current Transducer (0-2000Aac)	23783
10Vdc	Not applicable	10
Temp	Temperature Probes (M-4103, M-4107, M-4109)	120
Humidity	Humidity Probe (M-4109)	100
+/- 50mV	Shunt	Value stamped on Shunt
	Float Charging Current Probe (M-5601)	5

SUMMARY OF TECHNICAL SPECIFICATIONS

Mechanical:
Height : 4.5 cm (1.75 in)
Depth : 25.4 cm (10 in)
Width : 28.5 cm (11.2 in)
Weight : 7lb (3.18kg)

Environmental:
Operating Temp.: -40 to 65ºC (-40ºF to 149ºF)
Operating Humidity: 5 to 90%RH Non condensing
Storage Temp.: -40ºC to 70ºC (-40ºF to 158ºF)
Storage Humidity: 5 to 95%RH Non condensing

Electrical:
Input Voltage : - 40 to -60Vdc
consumption : 7W typically
Protection 2A or $1^{1/3}$A Fuse

Certifications/Homologations
FUSION is compliant with the following:
FCC Part 15 Subpart B
Industry Canada ICES-003 and CS-03
TIA-968
CSA 22.2 60950-1

FRONT PANEL OPERATION

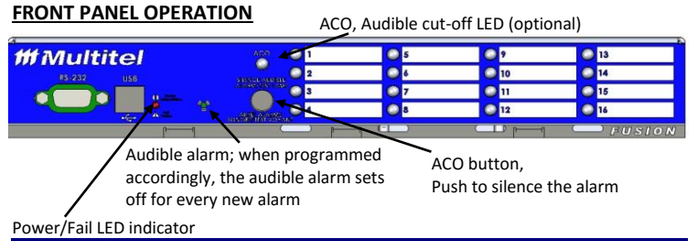

POWER /FAIL LED COLOUR	POSSIBLE CAUSE
White (OFF)	FUSION is not powered up correctly
Green	Hardware and software functional
Red	Hardware Failure
Red – flashing once	Defective Expansion I/O Card
Red – flashing twice	Problem with Front panel
Red- flashing 3 times	Low on-board lithium battery. Replace the battery
Red – flashing 4 times	Memory Problem
Red – flashing 5 times	EEPROM Problem
Red – flashing 6 times	RTC Problem (Real Time Clock)
Red – flashing 7 times	Power feed A or Power feed B Problem
Red – flashing 8 times	Optional Modem Problem
Red – flashing 9 times	Network Interface Problem
Red – flashing 10 times	Fatal Configuration Error
Red – flashing 11 times	Modbus configuration or communication problem
Red – flashing 12 times	NTP server unavailable or PID not working properly
Red – flashing 13 times	Defective Fusion I/O cards
Red – flashing 14 times	Anything other issues not reported in the previous flashing code 1 to 13. (Ex.: Dialup bridge, Modbus Display unavailable. Etc.)

COMMUNICATION PORTS

Craft port interfaces

Use either the front RS-232 or USB port as they do not operate simultaneously. ***FUSION*** detects the presence of cable on each port.

	RS-232 PORT	USB 2.0 PORT
Connector	DB-9 Female	Type B Female
Cable for Laptop	Direct DB9M to DB9F	Type A to Type B Male
Default Baud Rate	115200	115200
Driver	N/A	Available on CD ROM

Network Interfaces

INTERFACE (CONN.)	USE (PROTOCOL)
MLINK (RJ-11)	• MLINK protocol for 1U1S and I/O cards (Up to 15 C(x)) • MODBUS protocol for SMX & 3-party modules (up to 32 M(x))
RS-485 (RJ-11)	• MLINK protocol for 1U1S and I/O cards (Up to 15 C(x)) • MODBUS protocol for SMX & 3-party modules (up to 32 M(x))
Rear RS-232 (DB-9F)	• X.25 PAD, Generator controller, HVAC system… (Terminal) • External modem, Hayes compatible (Terminal, ASCII)
Modem (RJ-11)	• Connection to Public Switch Telephone Network (Terminal) • The modem is optional, speed up to 56kbps
Ethernet (RJ-45) (AUTO-MDIX) 10/100BASE-T	• Support secure IP protocol such as HTTP, SSL, NTP, SMTP, SNMPv1, v2 and v3, IMCP (PING), TELNET, SSH, HTTP(S) Transfer, RADIUS, SYSLOG, etc.. • Online charting and graphical HMI views.

I/O CHANNELS EXPANSION CAPABILITIES

The ***FUSION***'s I/O channel capacity can be expanded using:

- **SMX modules:** Two (2) different modules, the **SMX-48BI** add 48 binary inputs and the **SMX-24AI** adds 24 hybrid analog input channels. Operates on MODBUS RTU protocol over the two-wire half duplex EIA-485 port. Max of 64 SMX modules.
- **MODBUS modules:** Max of 64 Modbus RTU compatible third party devices per ***FUSION***. For each module, the following I/O channels setup is available :
  - ➢ **ANALOG** input: 28 per module
  - ➢ **BINARY** input: 16 per module
  - ➢ **BINARY** output: 8 per module
  - ➢ **ANALOG** output: 4 per module
- **SNMPget modules: M**ax of 16 IP supporting devices via SNMP v1, v2c. (May require your IT specialist's support for the use of MIBs files)
  - ➢ **ANALOG** input: 16 per module
  - ➢ **BINARY** input: 16 per module
- **Expansion Cards or 1U1S:** Maximum of 30 I/O cards per ***FUSION*** installed in up to 10 Expansion Shelf (each support 5 I/O cards) or in single card 1U1S expansion module. Uses the same I/O cards as the Expansion Shelf. Refer to the Quick reference sheet for the 1U1S module.
  - ➢ **ANALOG** Card: 18 Analog Input Channels + 18 Virtual Channels.
  - ➢ **EVENT** Card: 48 Binary Input Channels.
  - ➢ **OUTPUT** Card: 32 FORM "A" type relay contacts.

MULTITEL Inc. 175-2500, Jean-Perrin street, Quebec, QC, Canada G2C 1X1 T: 418.847.2255 F:418.847.1966 www.multitel.com

INFORMATION FREQUENLY NEEDED

INFORMATION NEEDED	ANSWER
FUSION system default IP address	192.168.1.1
Default TCP/IP port	23
Default user name to start a communication session	supervisor
Default password to start a communication session	No password
Default state for the Auto save mode parameter (in General System Parameters)	Disabled (setting recommended by Multitel to reduce EEPROM memory activity and therefore extend its lifespan)
Enter in configuration mode (users with SUPERVISOR access level only)	• HTTP interface: **Config** menu • Command Line Interface: type **config**
Proposed fuses for protection of the ***FUSION***'s power supply wiring	• On line Fuse of 2A. • Telecom distribution panel 1 1/3 A
Proposed fuses for protection of the analog input channels' wiring directly connected to non-isolated telemetry points	On line 2A
Supported web browser	IE 8 and more, Chrome, Firefox
Supported Terminal Emulation	HyperTerminal, Putty,

MAXIMUM DISTANCES BETWEEN THE TRANSDUCERS AND FUSION

TYPE OF MEASUREMENT	TRANSDUCER	CABLING AWG	MAX DISTANCE
DC Current ± 50mV	50 mV Shunts	24,22.20 twisted pairs	100 feet
DC Voltage 0-10V	----------	24,22,20 twisted pairs	250 feet
DC Voltage 0-65V	----------	24,22,20 twisted pairs	250 feet
Temperature	Temperature sensor M-4107 other model avail.	24,22,20 twisted pairs	500 feet
Humidity	Use M-4109 Temp./Humidity sensor	24,22,20 twisted pairs	500 feet
AC Voltage 23Vrms	Use SDTA-01 for 120/240Vac single phase	24,22,20 twisted pairs	250 feet
AC Current 1.4Vrms	Use Current CT's with 0.333mV output signal	24,22,20 twisted pairs	100 feet
Float Charging Current	Use FCCP-01 p/n M-5601	24, 22, 20, twisted pairs	100 feet
Binary Input Channel	Use door contact, water sensor, etc…	24, 26 solid wire	2000 feet
Energy Metering (V, I, kW, PF, Hz, etc..)	Use MODBUS RTU energy Meter (2-wire, half duplex)	24,22,20 twisted pairs	600 feet

Note: Transducer models are subject to change without notice; contact Multitel for the list of available accessories.

PIN-OUT FOR DIFFERENT FUSION's EXP1, EXP2, EXP3 or EXP4 I/O CARD CONFIGURATIONS

To verify the pin-out related to your ***FUSION***'s configuration, look which of the following figures matches your EXP card options. Only Figure A illustrates the whole ***FUSION***'s back view; Figure B to Figure I show the connector part, J1 to J9.

Figure A

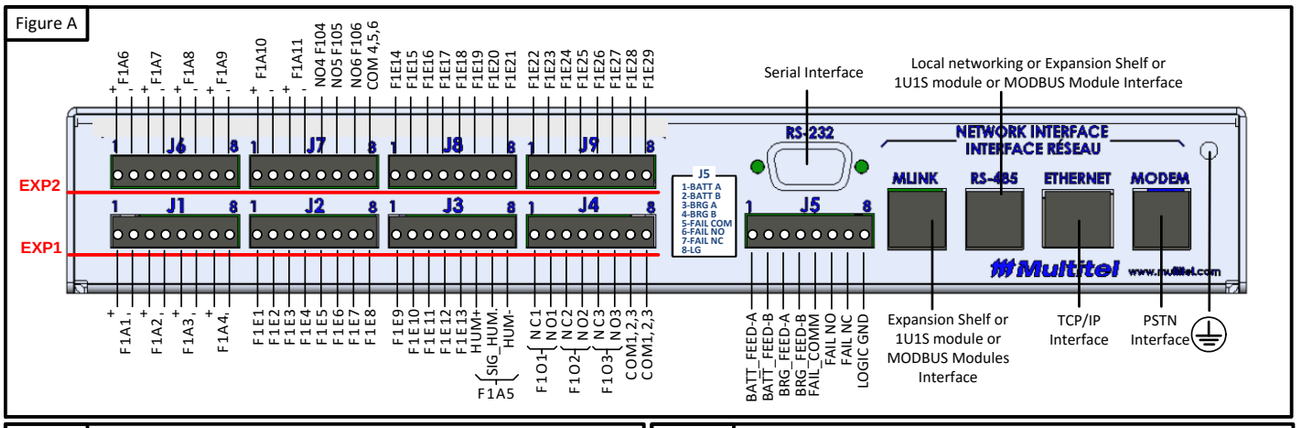

Figure B

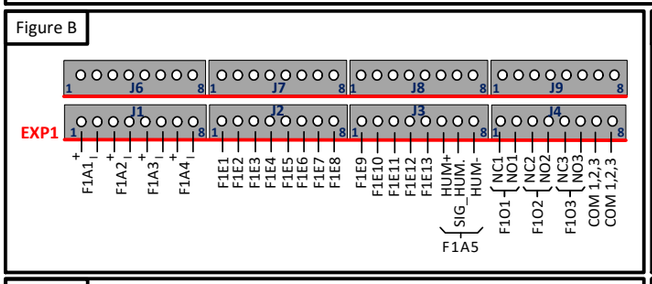

Figure C

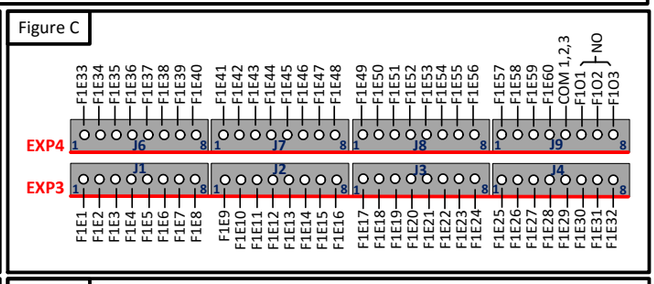

Figure D

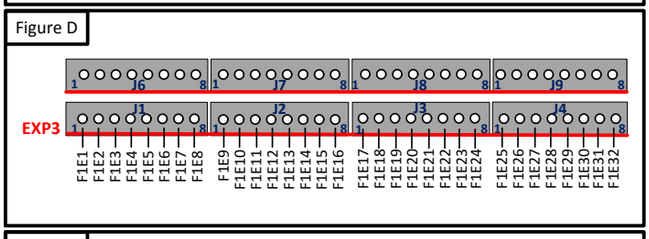

Figure E

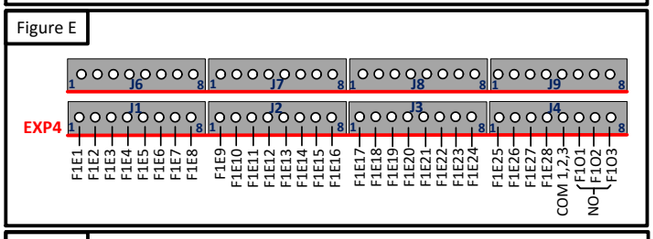

Figure F

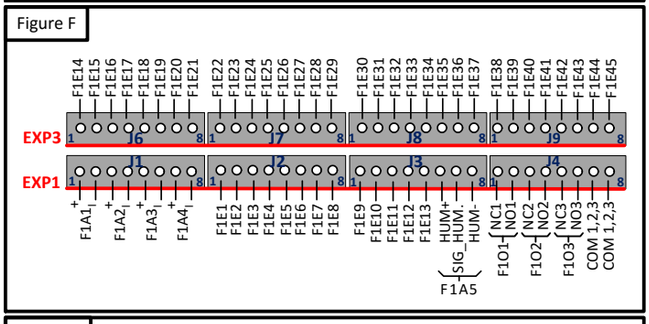

Figure G

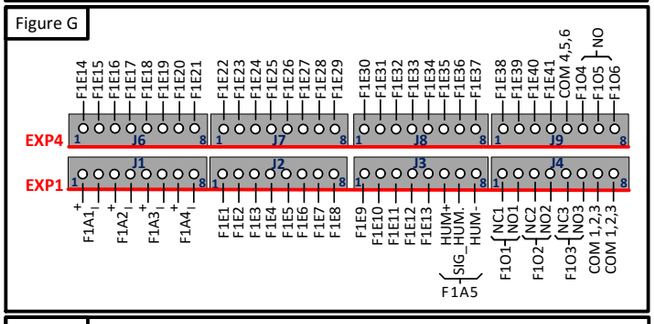

Figure H

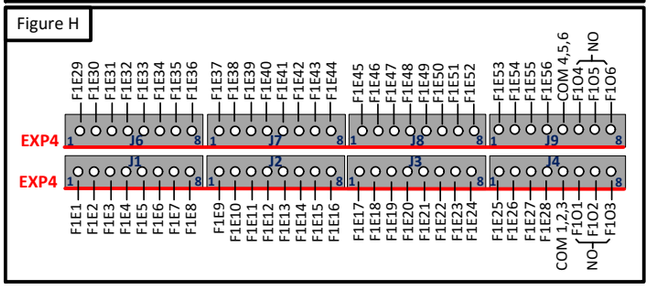

Figure I

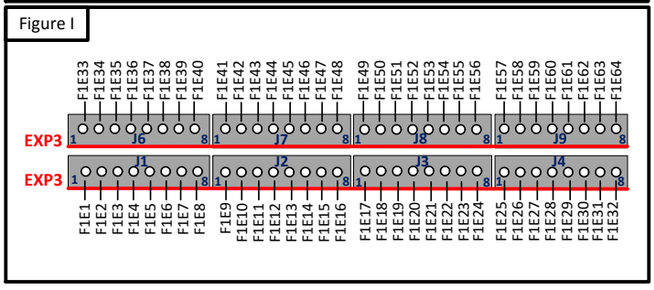

MULTITEL Inc. 175-2500, Jean-Perrin Street, Quebec, QC, Canada G2C 1X1 T: 418.847.2255 F:418.847.1966 www.multitel.com