Multitel

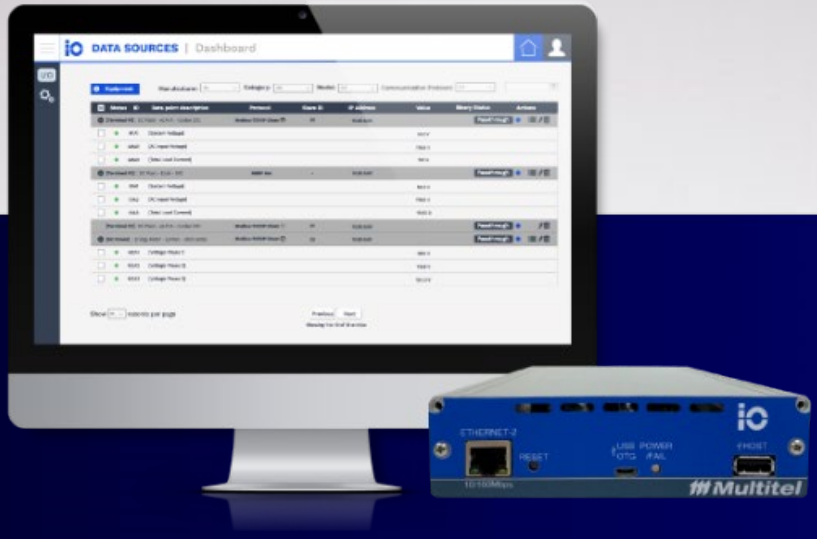

IO GATEWAY
INSTALLATION GUIDE

PROPRIETARY INFORMATION

The information contained in this document is the property of **MULTITEL INC**. Except as specifically authorized in writing by **MULTITEL INC**., the holder of this document shall:

1. Keep all information contained herein confidential and shall protect same in whole or in part from disclosure and dissemination to all third parties and;
2. Use this document for operating and maintenance purposes only.

Document Name:	GUSB_IOGatewayv1_0
Issue:	1.0
Revised by:	Simon Boivin, PLM
Date (MM/DD/YYYY):	17/10/2019

© All rights reserved. Multitel 2020. Printed in Canada.

TABLE OF CONTENTS

1. HARDWARE INSTALLATION 8

1.1 PREPARING TO INSTALL IO GATEWAY 8
1.1.1 Equipment supplied by Multitel 9
1.1.2 Required tools and/or material not supplied by Multitel 9
1.2 MOUNTING IO GATEWAY 9
1.2.1 Rack Mounting 10
1.2.2 Standalone 10
1.2.3 Mounted with Fusion 10
1.2.4 Chassis Ground 10
1.3 DEVICES CONNECTION TO IO GATEWAY 11
1.3.1 Ethernet Ports Connection 12
1.3.2 RS-485 Ports Connection 13

2. POWERING IO GATEWAY 15

2.1 WIRING POWER INPUT 15

3. INSTALLATION CHECKLIST 17

4. IO GATEWAY SETUP FIRST TIME CONNECTION 18

4.1 LOGIN 20
4.2 SETTINGS 21
4.2.1 User and Access Levels 21
4.2.2 Site Information 22
4.2.3 Connections 22
4.3 PROTOCOLS 28
4.3.1 HTTP/HTTPS 28
4.3.2 PING 28
4.3.3 Modbus 28
4.4 CATEGORIES AND MODELS 29
4.4.1 Category 29
4.4.2 Model 30
4.5 DATA SOURCE 31
4.6 IO GATEWAY MONITORING CAPABILITIES 31
4.6.1 Standard Mode 31
4.6.2 Transparent Mode 31
4.7 PASSTHROUGH 44

© All rights reserved. Multitel 2020. Printed in Canada.

FIGURES

Figure 1 - Maximum Distances 8
Figure 2 – iO Gateway Standalone Rack 10
Figure 3 – iO Gateway Mounted with Fusion 10
Figure 4 - Chassis Ground 11
Figure 5 - Front Ethernet Ports 12
Figure 6 - Back Ethernet Ports 12
Figure 7 – RS-485 connectors 14
Figure 8 – iO Gateway Power Input and Fail 15
Figure 9 – iO Gateway First Time Connection 18
Figure 10 – Changing IPv4 Properties on PC 19
Figure 11 – IP address in Web browser 19
Figure 12 – First Time Login 20
Figure 13 – Reset User Password 21
Figure 14 – Login Page with site information 22
Figure 15 – iO Gateway Connections 23
Figure 16 – iO Gateway Connections 24
Figure 17– Ethernet 1- Back interface 25
Figure 18- iO Gateway – LAN Configuration 25
Figure 19 - Ethernet 2 - Front interface 26
Figure 20– iO Gateway LAN/WAN Connection 27
Figure 21 – iO Gateway Network and Serial Connections 27
Figure 22 – RS-485 COM A Interface 28
Figure 23 – Modbus Protocol Interface 29
Figure 24 – New Equipment Category Interface 30
Figure 25 – New Equipment Model Interface 30
Figure 26 – iO Gateway – Monitoring Architecture 32
Figure 27 – Step 1 32
Figure 28 – Equipment Creation Interface 33
Figure 29 – Standard Mode 33
Figure 30 – Modbus TCP/IP - Standard Mode Equipment Interface 34
Figure 31 – Modbus TCP/IP - Standard Mode Equipment in Data Source / Dashboard Interface 34
Figure 32 – Modbus TCP/IP – Standard Mode List Data Points Interface 35
Figure 33 – Data source / Dashboard with Data Points Interface 35
Figure 34– Transparent Mode 35
Figure 35 – Modbus TCP/IP - Transparent Mode Equipment Interface 36
Figure 36 –Modbus TCP/IP – Transparent Mode Equipment in Data Source / Dashboard Interface 36
Figure 37 –SNMP 36
Figure 38– SNMP Get v1/v2c Equipment Creation Interface 37
Figure 39 –SNMP Get v3 Equipment Creation Interface 38
Figure 40 –SNMP Get Equipment in Data Source / Dashboard Interface 38
Figure 41– SNMP Get Data Point Interface 39
Figure 42 –Data source / Dashboard with SNMP Get Data Point Interface 39
Figure 43 – Serial 39
Figure 44 – Modbus RTU Advanced Option Interface 40
Figure45– RTU – Standard Mode – Module Configuration 40
Figure 46– RTU – Standard Mode – Data Point Configuration 41
Figure 47 – RTU – Standard Mode – Data Point Monitoring 41
Figure 48 – Equipment – Transparent Mode 41
Figure 49 – RTU – Transparent Mode – Module Configuration 41
Figure 50– RTU – Transparent Mode – Data Point Configuration 42
Figure 51– Transparent Mode – Data Point Monitoring 42
Figure 52 – SNMP Advanced Option Interface 43
Figure 53– RTU – SNMP GET – Module Configuration 43

Figure 54– RTU – SNMP GET – Data Point Configuration *44*
Figure 55 – RTU – SNMP GET – Data Point Monitoring *44*
Figure 56 – Passthrough Interface *44*
Figure 57 – Save & Reboot Confirmation *45*
Figure 58 – Passthrough Activated in Data Source/Dashboard *45*

TABLES

Table 1 – RJ45 Connectors Pinout 13
Table 2 – RJ45 Connectors Pinout 13
Table 3 – RS-485 Connectors Pinout 14
Table 4 – iO Gateway power consumption 15
Table 5– Power Input Pinout 16
Table 6 – Installation Checklist 17
Table 7 – iO Gateway Ethernet Ports Factory Settings 18
Table 8 - iO Gateway Web Browsers 19
Table 9– iO Gateway Default Credentials 20
Table 10 – Standard Mode – Modbus Register Mapping 40
Table 11 – SNMP GET – Register/OID Mapping 43

CONTROL SHEET

Issue	Date MM/DD/YYYY	Description	Originator
1.0	02/24/2020	First release	S. Boivin

1. HARDWARE INSTALLATION

1.1 PREPARING TO INSTALL IO GATEWAY

In accordance with Articles 100-16, 100-17 and 110-18 of the National Electrical Code, ANSI/NFPA # 70 1987 this equipment shall be installed in a restricted access area. It should be installed by qualified personnel as close as possible to the equipment to be monitored to reduce cabling and installation time. These are maximum distances that shall not be exceeded in order to maintain the highest level of performance possible.

Figure 1 - Maximum Distances

Description	Cabling	Maximum Distance
Logic Ground	24, 26	2000 ft
Input Power	22, 20 twisted pairs	250 ft
Ethernet	Cat-5	328 ft*
RS-485	22, 24 twisted pairs	Up to 4000 ft**

NOTE:

Ethernet Maximum Distance is specified at 328 ft but depending on the configuration it could be possible to reach greater distances but it is not garantuee. It is recommend to use a booster or a router/switch at each 328ft to stabilize the network.

NOTE:

RS-485 Maximum Distance will depend on the baudrate. The greater the baudrate is the lower the maximum distance will be.

Before proceeding with iO Gateway's installation it is important to have a good understanding of the possible device relationships and interconnections with third party smart devices. This type of information can be found in engineering or interconnection diagrams, methods of procedure or other specific application guides.

For additional support please do not hesitate to contact the Multitel Customer Service Engineering Group at support@multitel.com.

1.1.1 EQUIPMENT SUPPLIED BY MULTITEL

Each iO Gateway is supplied with the following items:

- 1 x 7 pin screw type modular connectors
- 2 x 3 pin screw type modular connectors
- 1 x ring terminal for wire range 18-14 for ground lug
- 1 x hexagon locknut #8-32
- 1 x tooth lock washer #8

IMPORTANT NOTE:

Before proceeding with installation verify that all material has been received and is in good condition.

1.1.2 REQUIRED TOOLS AND/OR MATERIAL NOT SUPPLIED BY MULTITEL

- 2x Cat-5 Cables
- 2x RS-485 Cables
- Ground cable #14 AWG and ground lugs
- Terminal lugs (fork type or others) #22-16
- In-line fuse holders (to protect iO Gateway from signals connected to the shunts or to any point other than ground Multitel ordering code : FSBL-TL)
- Fuses, 1 1/3 amp
- Safety glasses or goggles
- Anti-static wrist strap
- Computer to access the web interfaces of iO Gateway
- Standard installation tools (various screw drivers, long nose, cutters, etc.)
- Digital voltmeter/multimeter, 3½ digit (or better)
- Ammeter 31/2 digits (or better).
- Crimping tool for the terminal lugs of certain accessories (fork type or others)
- Blade screwdriver 3/32” (2.4mm)

1.2 MOUNTING IO GATEWAY

iO Gateway is designed to be installed in a Telecom Central Office environment, but is also suitable for other industrial sectors. The iO Gateway must be rack mounted and its chassis should be located as close as possible to the equipment and the monitoring that has to be physically connected to the system.

1.2.1 RACK MOUNTING

Please note iO Gateway mounting solutions are not included and need to be purchased as an option. There are two types of mounting options: Standalone and Mounted.

1.2.2 STANDALONE

iO Gateway must be installed in standard 19" or 23" telecommunication relay racks. The provided mounting brackets adapt rack mounting for European and North American relay rack standards and provide a flush installation. The 19" bracket can support up to 3x iO Gateway or SMX Modules. An 4" extension ear is provided for installation on a 23" rack. Also provided is 3x plates used to cover unused modules.

Figure 2 – iO Gateway Standalone Rack

1.2.3 MOUNTED WITH FUSION

If you have acquired the iO Gateway with a FUSION or you already have a FUSION mounted. This solution is preferable since it require only an 1U space rack. The mounting option provides a support that is connected to the FUSION and rack. An extension ear is alo provided for 23" rack installation.

Figure 3 – iO Gateway Mounted with Fusion

1.2.4 CHASSIS GROUND

Once iO Gateway is installed and secured in the rack the chassis must be connected to a reliable ground source. The ground wire shall be installed in accordance with local electrical safety standards.

- For NEC-compliant grounding, a size 14 AWG (22 mm) or larger copper wire and an appropriate user-supplied ring terminal with an inner diameter of 1/4 inch (5 to 7 millimeters) are used for the installation.

- For EN/IEC 60950-compliant grounding a size 18 AWG (12 mm) or larger copper wire and an appropriate user-supplied ring terminal is used for the installation.

IMPORTANT NOTE:

iO Gateway must be grounded. NEVER remove the ground conductor or operate the equipment in the absence of a suitably installed ground conductor. It may be necessary to contact the appropriate electrical inspection authority or an electrician to ascertain that a suitable grounding is available.

Follow these steps to install the ground connection:

1. Strip one end of the ground wire to the length required for the ground lug or terminal.
2. Crimp the ground wire to the ground lug or ring terminal using a proper wire crimper of the appropriate size.
3. Attach the ground lug or ring terminal to the chassis as shown in the figure below. Use the nut and lock washer provided. Tighten the nut securely.

Figure 4 - Chassis Ground

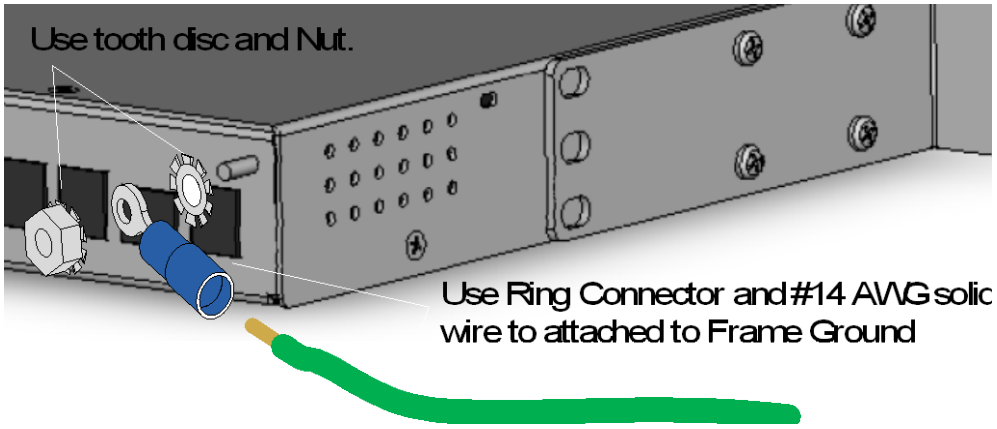

1.3 DEVICES CONNECTION TO IO GATEWAY

Devices that are not manufactured by Multitel can be connected to iO Gateway. These devices are commercially available and should be qualified before being installed by competent personnel. Each device carries its own technical specifications that are not made available in this user guide. Please refer to the manufacturer's technical documentation for each equipment specifications.

Following are the technical limitations when connecting a device to the iO Gateway:

- The industry-standard Modbus TCP/IP and SNMP protocols are supported;

- Communication ports are available on Ethernet 1/Ethernet 2 and/or both RS-485 ports;
- Ethernet Speed can be adjusted from 10 Mbps, 100 Mbps or 1Gbps (only Ethernet 1). An Automatic speed option can also be selected.
- Each Equipment Polling Rate and Time Out can be adjusted.

1.3.1 ETHERNET PORTS CONNECTION

iO Gateway comes with two separate Ethernet ports, a 10/100Mbps port is available on the front panel and a 1Gbps port is available on the back panel. iO Gateway can support in up to 128x devices with Modbus TCP/IP and in up to 128x devices with SNMP protocol. Please note that these numbers might not be achieved because of the limitation of the device computing power. The actual limit will depend on the number of data points of each device, and the polling rate.

Figure 5 - Front Ethernet Ports

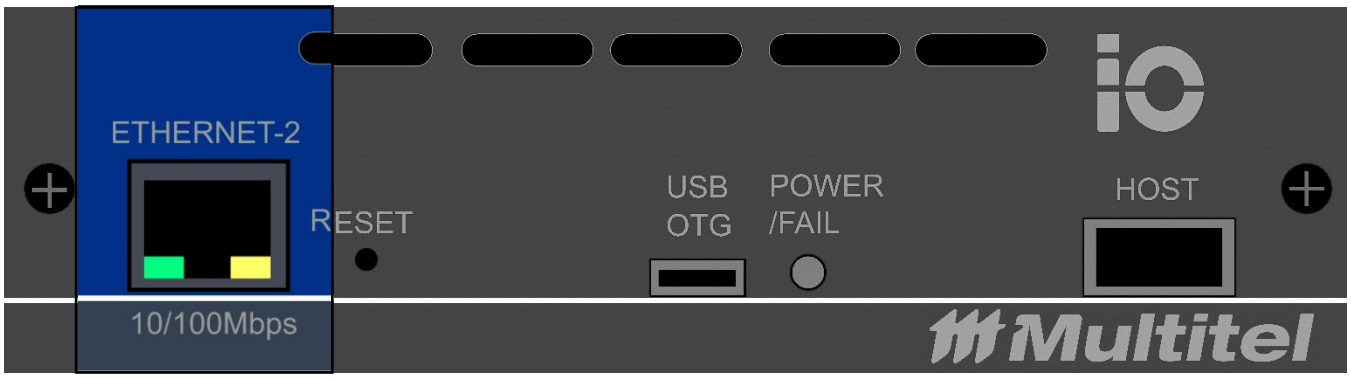

Figure 6 - Back Ethernet Ports

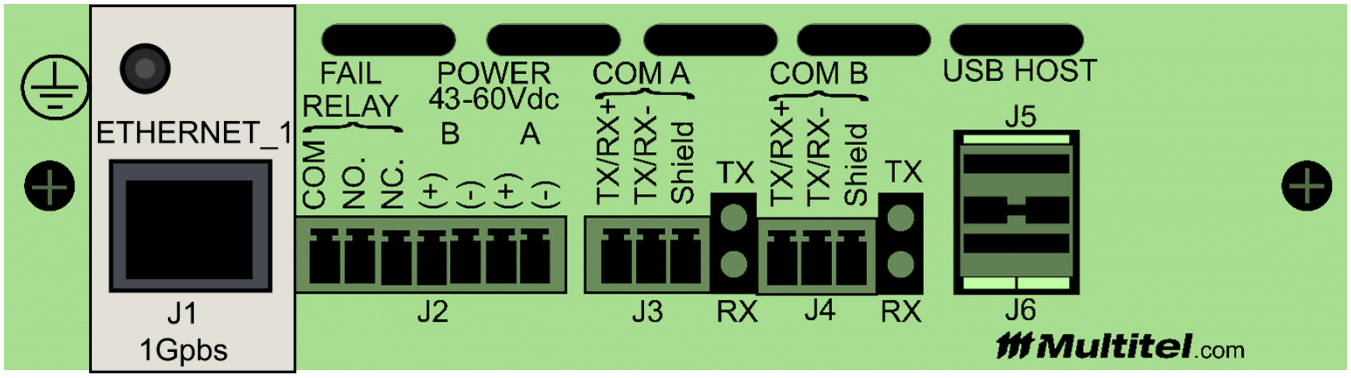

Multitel recommends the use of a straight Cat-5 cable. Both Ethernet ports come with RJ45 connectors. Commercial Cat-5 cable can be used or Cat-5 cable can be made using the following pinout.

Table 1 – RJ45 Connectors Pinout

PIN	Name	Type
1	TX “+” Transmit Data – Positive	OUT
2	TX “-“ Transmit Data – Negative	OUT
3	RX “+” Receive Data - Positive	IN
4	Not Used	N/A
5	Not Used	N/A
6	RX “-“ Receive Data – Negative	IN
7	Not Used	N/A
8	Not Used	N/A

There are two (2) LEDs on each RJ45 connector to indicate the network status and the communication activity. The following table indicates the status of each LED.

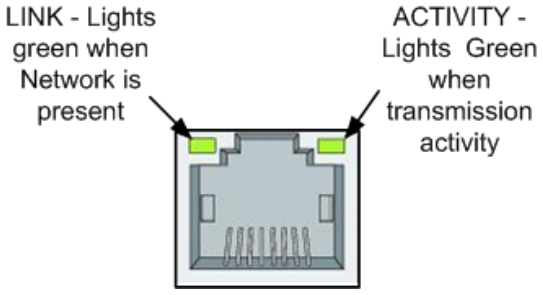

Table 2 – RJ45 Connectors Pinout

Name	Color	Status
Link	Not lit	No TCP/IP connection
	Solid Green	TCP/IP is detected
Activity	Lit Green	Ethernet activity
	Not lit	No Ethernet activity

1.3.2 RS-485 PORTS CONNECTION

iO Gateway can support up to 64 Modbus RTU devices connection on each RS-485 port. The actual limit will depend on the number of data points of each device, and the polling rate.

Please refer to the vendor’s technical documentation for installation, wiring and Modbus RTU registry instructions.

RS-485 wiring can be complex when multiple devices are connected. When running wires for long distances, RS-485 networks should always be wired in a bus (or daisy-chain) configuration. The bus should start at the iO Gateway and then be run to each meter in turn. Branches and “home-run” wiring (i.e. each module is wired back to iO Gateway individually) should be avoided. For best results, especially when running longer distances, shielded twisted-pair cables should be used to prevent interference. **NB: Shielded cable should be connected to ground at one end only.**

RS-485 connectors are found on the backplate of the iO Gateway module. There are two independent RS-485 connectors: COM A and COM B. The block used to connect to the COM ports needs to be a 3x position terminal block header, male pins, shrouded (4 Side) 0.138" (3.50mm) 90°, right angle through holes.

Figure 7 – RS-485 connectors

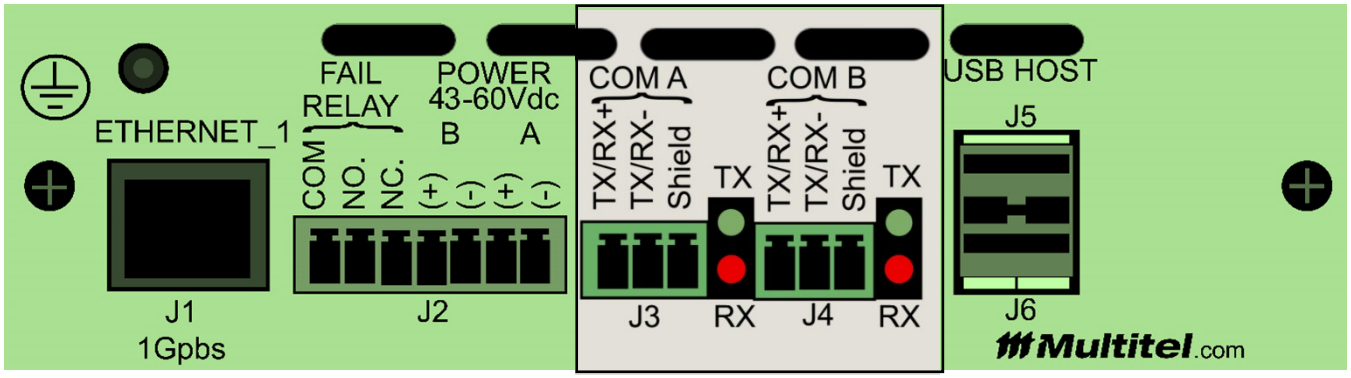

The following table presents the pinout of the two RS-485 connectors.

Table 3 – RS-485 Connectors Pinout

Connectors	PIN	Name	Type
J3	1	TX/RX+ COM A	IN
	2	TX/RX- COM A	IN
	3	Shield - COM A	IN
J4	4	TX/RX+ COM B	IN
	5	TX/RX- COM B	IN
	6	Shield - COM B	IN

2. POWERING IO GATEWAY

iO Module must be powered with a -48Vdc feed with an input voltage range of -43Vdc to -60Vdc.

Table 4 – iO Gateway power consumption

Typical Input Voltage	Input Voltage Range	Max Current	Max Power Consumption	Fuse
-48Vdc	-43 Vdc to -60 Vdc	300 mA at 48Vdc	14.4 W	1 1/3 A Max.

Figure 8 – iO Gateway Power Input and Fail

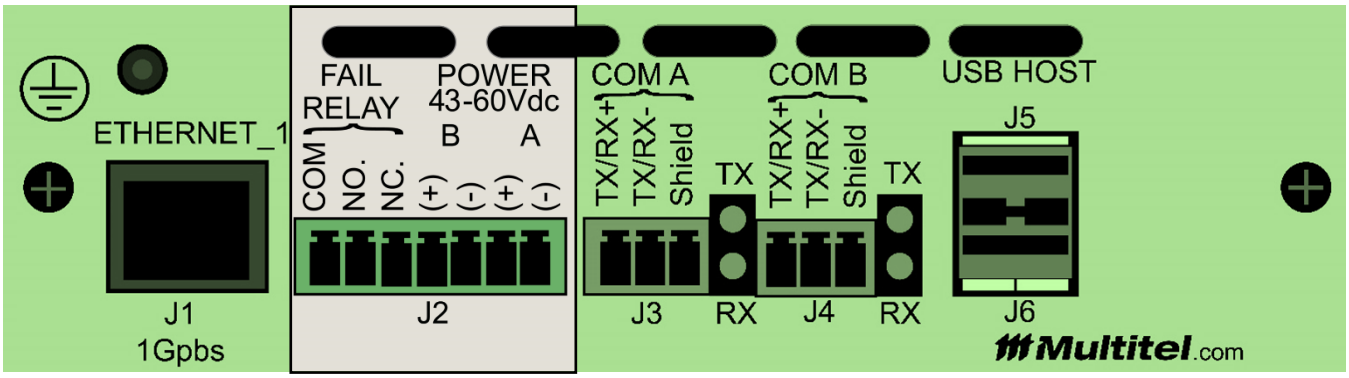

2.1 WIRING POWER INPUT

iO Gateway is powered by a continuous -48Vdc power source. The module is equipped with A & B feed positions for power redundancy. Power Input status can be found in the **General Parameters – System Information.** A readily accessible disconnect device shall be incorporated within the power wiring in order to disconnect the equipment from the 48Vdc supply for servicing.

Using a wire-stripping tool, strip each of the four wires coming from the DC-input power source to 0.25 inch (6.3 mm) + 0.02 inch (0.5 mm). Do not strip more than 0.29 inch (7.4 mm) of insulation from the wire. Stripping more than the recommended amount of wire can leave exposed wire from the terminal block plug after the installation. Insert wires into the terminal block according to the following table.

Table 5– Power Input Pinout

Connectors	PIN	Name	Description	Type
J2	4	BRG - B	Battery return ground “B” feed	IN
	5	BATT FEED - B	Battery -48V “B” feed	IN
	6	BRG - A	Battery return ground “A” feed	IN
	7	BATT FEED - A	Battery -48V “A” feed	IN

NOTE:

The pin numbering for the connector is from left to right.

3. INSTALLATION CHECKLIST

iO Gateway installation can be tested using this checklist :

Table 6 – Installation Checklist

QUESTIONS	
Are the frame grounds connected?	
Are both “A” and “B” feeds powered?	
Are there any bare ended power cables?	
Are there any loose cables and are all cables attached or tie-wrapped together?	
Have all mounting screws been tightened?	
Is the iO Gateway POWER/FAIL LED on the front panel solid green?	
Are the cable designations clear and self-explanatory?	
Are the unit IP addressed labeled?	
Have the distribution fuse locations been assigned and designated?	
Are all measurement readings calibrated?	
Is the polarity for each input signal correct?	

4. IO GATEWAY SETUP FIRST TIME CONNECTION

iO Gateway interfaces need to be accessed via a web browser. iO Gateway can either be accessed by the front or the back Ethernet port. However, for the first connection, the front Ethernet port needs to be used because the backport doesn't have a static IP address (DHCP). The following table shows the factory settings for both Ethernet ports.

Table 7 – iO Gateway Ethernet Ports Factory Settings

Ethernet Ports	Mode	IPv4 Address
Ethernet 1 – Back	DHCP	N/A
Ethernet 2 - Front	Static	192.168.1.2

A local area network (LAN) needs to be configured between the iO Gateway Ethernet front port and the user's PC.

Figure 9 – iO Gateway First Time Connection

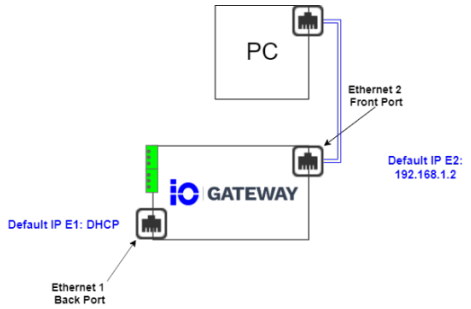

In order to create a LAN between a PC and the iO Gateway. The user needs to change the ethernet port adapter proprieties. This can be done by on a Windows machine by:

1. Going to control panel
2. Change adapters settings
3. Click on the desire ethernet port
4. Click on properties
5. Click on Internet Protocol Version 4 (TCP/IPv4)
6. Click on properties
7. Change the IP address and subnet mask (ex. 192.168.1.100 & 255.255.255.0).

Figure 10 – Changing IPv4 Properties on PC

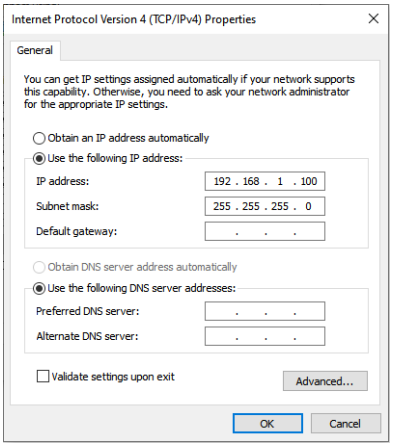

Once the LAN is configured the user needs to input the default IP address (192.168.1.2) in the address bar of a web browser.

Figure 11 – IP address in Web browser

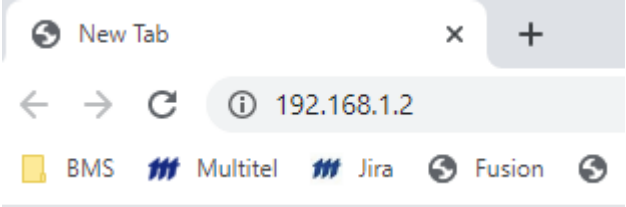

Please note that iO Gateway is using a web server version that has been released in 2019 that doesn't support legacy web browsers. Below is a table that shows which web browsers are supported by iO Gateway.

Table 8 - iO Gateway Web Browsers

Web Browser
Chrome
Firefox
EDGE

4.1 LOGIN

Once the default IP address is entered in the address bar and the LAN configuration has been properly done the user will access iO Gateway Login Page.

Figure 12 – First Time Login

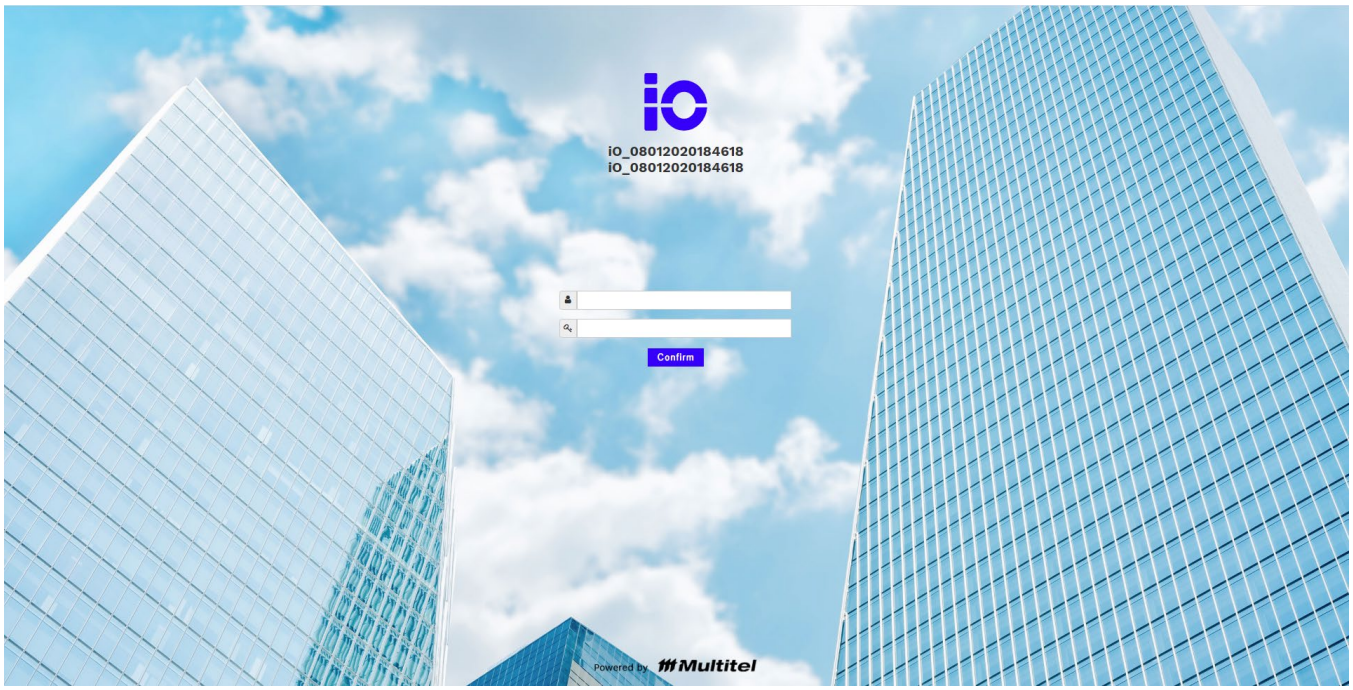

The factory settings for the credential are the following :

Table 9– iO Gateway Default Credentials

Credentials		
Administrator	Username	administrator
	Password	admin
User	Username	user
	Password	user
Viewer	Username	viewer
	Password	viewer

4.2 SETTINGS

4.2.1 USER AND ACCESS LEVELS

Multitel recommends changing the factory password of the 3 default users in order to secure the access to the iO Gateway. The new password should be at least 8 characters long and include letters (both upper and lower case), digits and symbols.

Administrator can reset passwords from every user. To change the password on a user:

1. Click on **Settings**
2. Click on **Security**
3. Select the desired user using the selection box
4. Click on Reset my Password
5. Enter New Password
6. Click on Reset

Figure 13 – Reset User Password

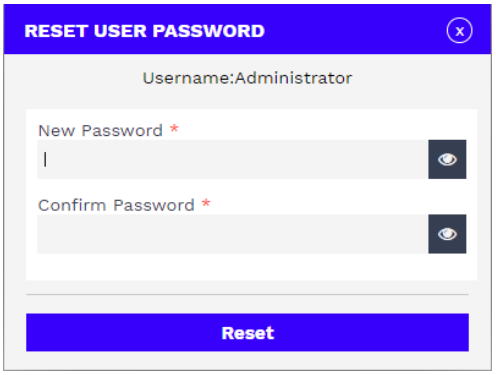

User with user and viewer access level can only reset their own password.

1. Click on the **iO icon** at the top right
2. Click on **User Profile**
3. Click on Reset my Password

IMPORTANT NOTE:

Administrator user cannot be deleted.

4.2.2 SITE INFORMATION

The next step after setting up new passwords for every user is to configure the site information.

1. Click on **Settings**
2. Click on **General Parameters**
3. Click on **Site Information**
4. Enter Site Name and CLLI number in General Information
5. Enter location information
6. Click on the **iO icon** at the top right
7. Click on **Log Out**

The site name and CLLI number will appear on the **Login Page**.

Figure 14 – Login Page with site information

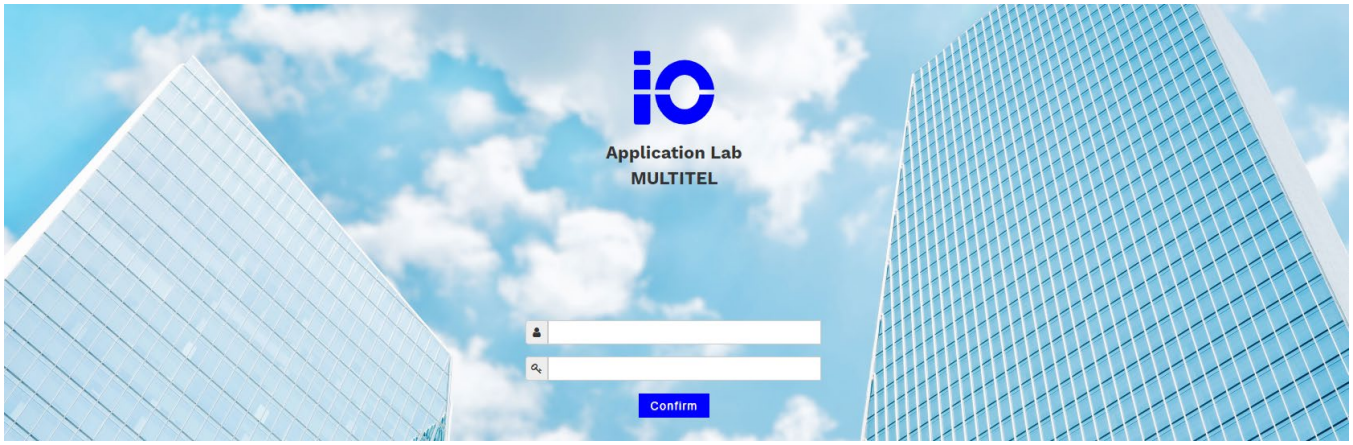

4.2.3 CONNECTIONS

The connections section required an understanding of network management and serial-based protocols. This manual will not provide a complete step-by-step process of network and serial communication but is assuming that the reader is educated in both subjects.

This section will be divided into two sub-sections: Ethernet Ports, and RS-485 Ports. The connections section can be accessed by clicking on **Settings - Connections**

Figure 15 – iO Gateway Connections

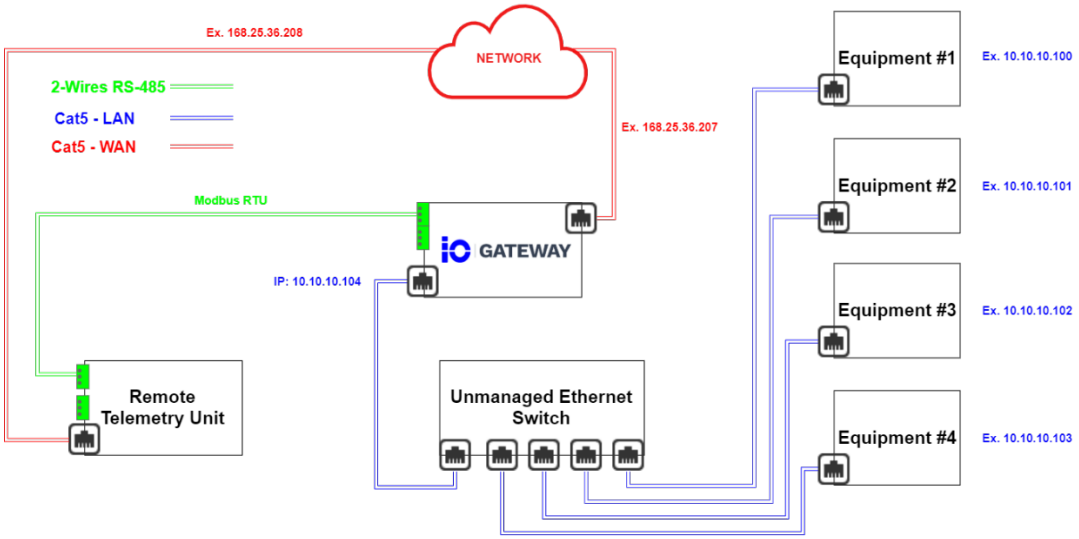

4.2.3.1 Ethernet Ports

The LAN between the reader's PC and the iO Gateway should be the only connection at this point. In order to connect the iO Gateway to other devices, a new LAN needs to be configured. The iO Gateway is going to use this LAN to monitors the desired pieces of equipment. If the iO Gateway is only intended to monitor a piece of single equipment, the user can create a simple LAN between the iO and the single equipment. In most case however, multiple pieces of equipment will be monitored at the same time. In that case, an or several unmanaged ethernet switches will be required. When dealing with multiple pieces of equipment, the user needs to make sure that each equipment IP is configured to be on the same network.

In this example, 4x pieces of equipment need to be monitored. A 5-ports unmanaged ethernet switch is selected to create the LAN between the equipment and the iO Gateway. IPs from the equipment are configured on the 10.10.10.X network.

Figure 16 – iO Gateway Connections

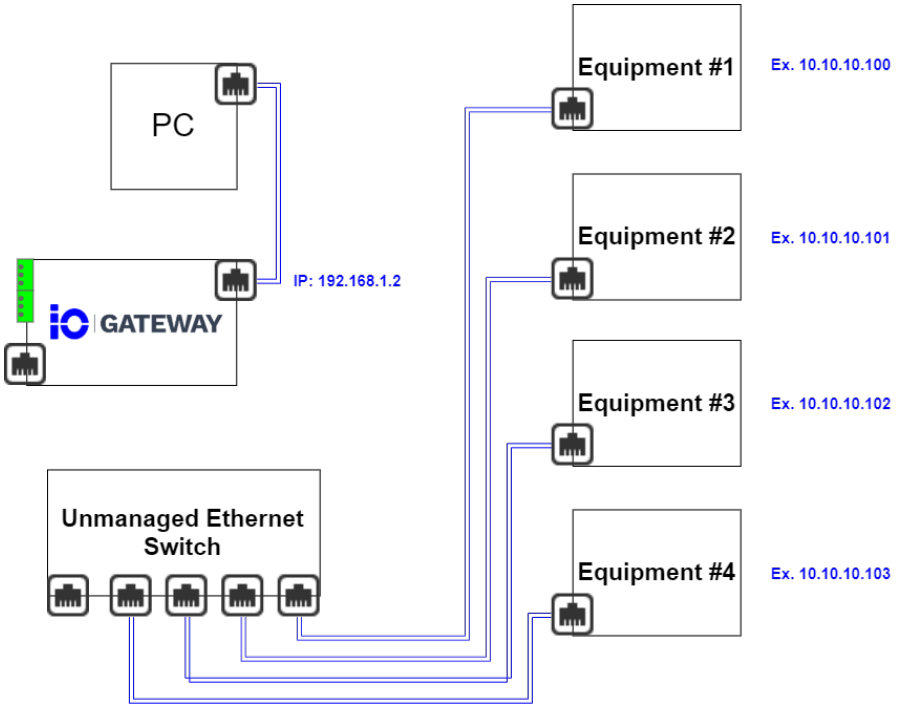

A Cat-5 cable will need to be installed between the iO Gateway back ethernet port and the unmanaged switch to complete the LAN.

Step 1 – Configure the iO Gateway/Equipments LAN :

1. Click on **Settings**
2. Click on **Connections**
3. **Ethernet 1 – Back**
4. Enabled the port
5. Keep MTU at 1500 unless specified otherwise by your network administrator.
6. Keep Speed at Auto unless specified otherwise by your network administrator.
7. Click on Mode to change from DHCP to Static.
8. Enter IPv4 Address, IPv4 Subnet Mask and iPv4 Gateway. Make sure that every equipments that you wish to connect to the iO Gateway will be configured to the same IP network.
9. Click on Save
10. **Reboot** the iO Gateway (the reboot button will appear in the header)

Figure 17– Ethernet 1- Back interface

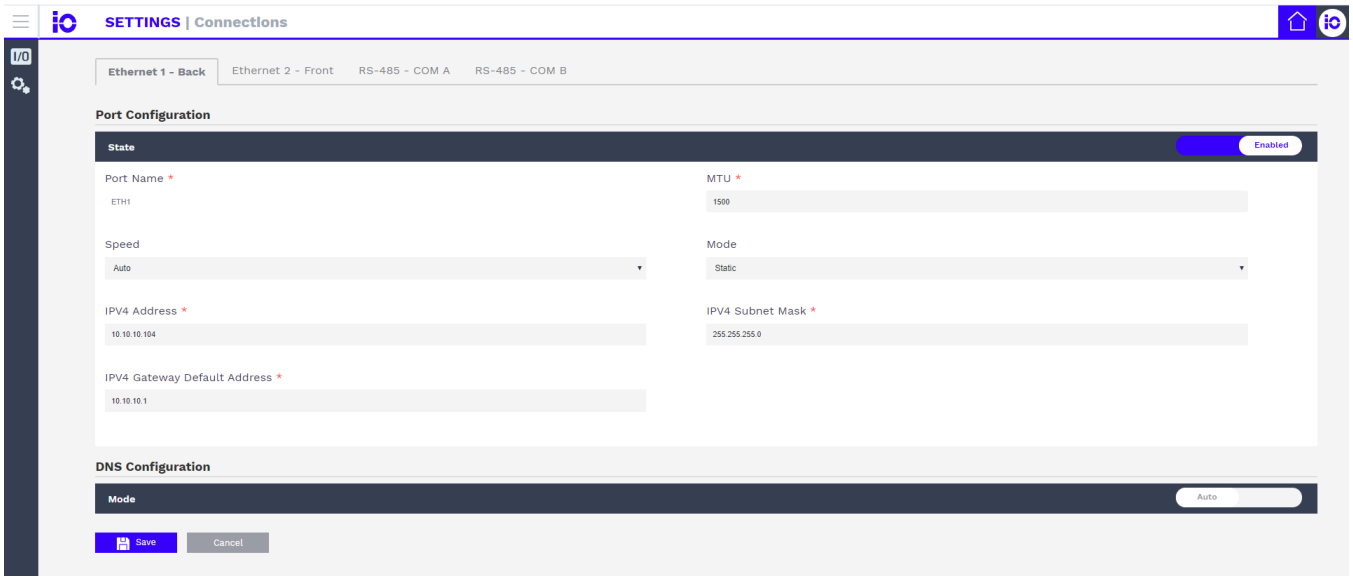

Once the iO Gateway is rebooted, the iO Gateway/Equipment LAN will be configured.

Figure 18- iO Gateway – LAN Configuration

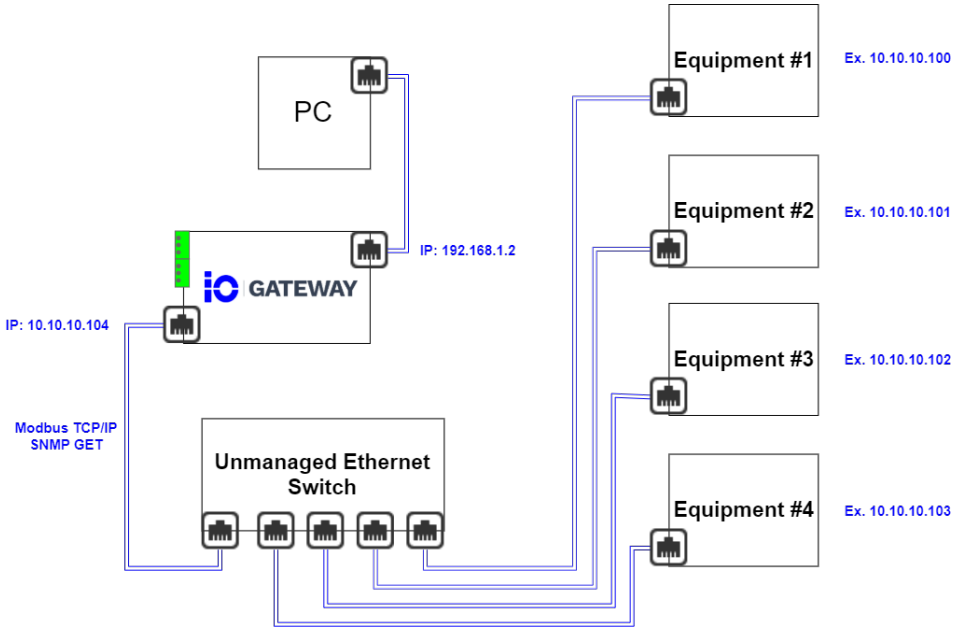

The next step consists of configuring the WAN connection between the iO Gateway and the user's network. The user will, therefore, be able to access the iO Gateway web interfaces remotely. The user should get the WAN IP from their IT management team. The WAN will be configured on the front ethernet port which the reader is currently

using to connect to the device. Modifications to the ethernet front port can be done directly on the user PC but please note that once the modifications are saved and the device rebooted, the iO Gateway will no longer respond to the 192.168.1.2 IP. The device will respond to the actual IP address that the user has configured on the ethernet front port.

Figure 19 - Ethernet 2 - Front interface

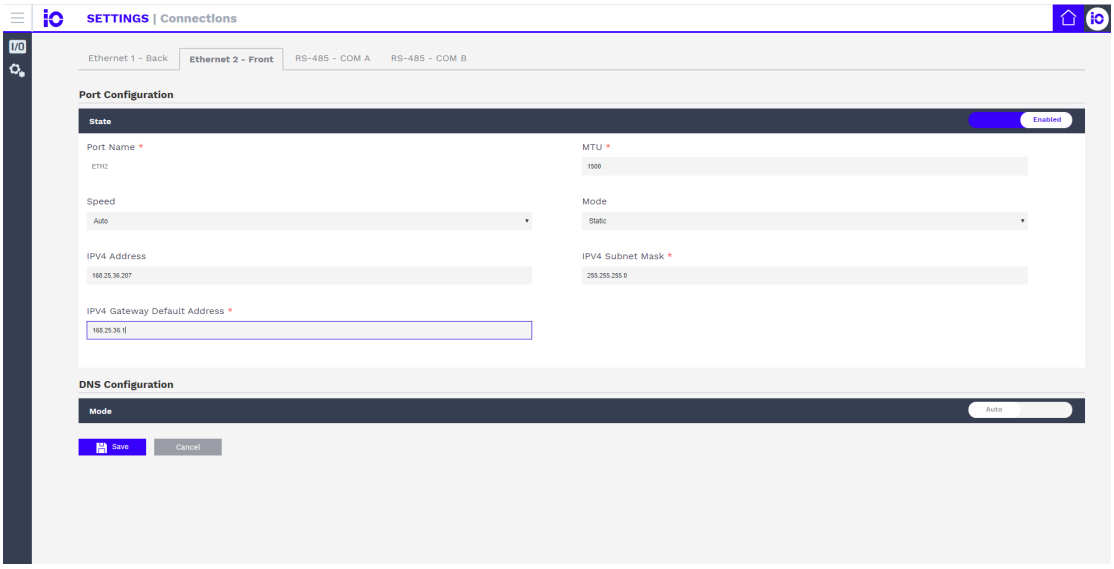

Step 2 – Configure the WAN:

1. Click on **Settings**
2. Click on **Connections**
3. **Ethernet 2 – Front**
4. Keep MTU at 1500 unless specified otherwise by your network administrator.
5. Keep Speed at Auto unless specified otherwise by your network administrator.
6. Change IPv4 Address, IPv4 Subnet Mask and iPv4 Gateway.
7. Click on Save
8. Reboot the device

A DNS can also be configured:

1. Click on Auto to change it to Manual
2. Enter Primary DNS and Secondary DNS IPv4 addresses.
3. Click on Save

Figure 20– iO Gateway LAN/WAN Connection

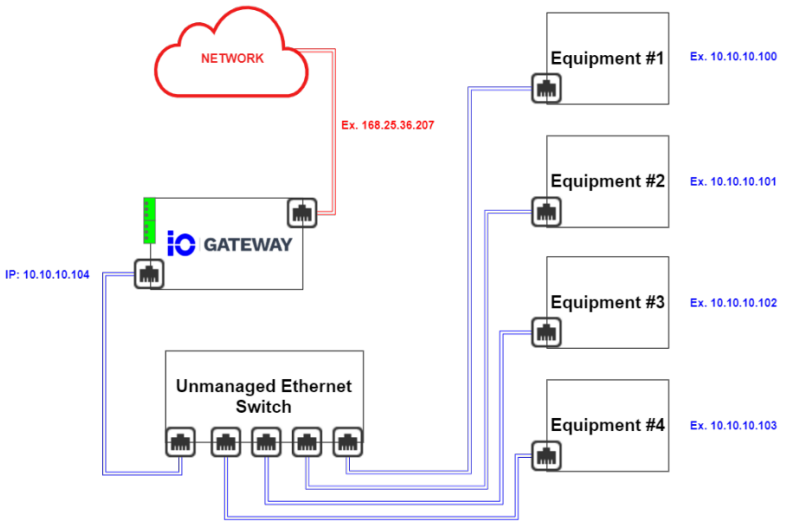

Once the device is rebooted the reader can access iO Gateway web interfaces directly from its own network.

4.2.3.2 RS-485 Ports

At this point, the iO Gateway is able to access the pieces of equipment on the LAN. A serial-based connection needs to be made between the iO Gateway and a supervisor device such as a Remote Telemetry Unit (i.e. RTU). Multitel recommends the use of its own RTU called FUSION. To get access to iO Gateway data the RTU needs to support Modbus RTU – Master.

Figure 21 – iO Gateway Network and Serial Connections

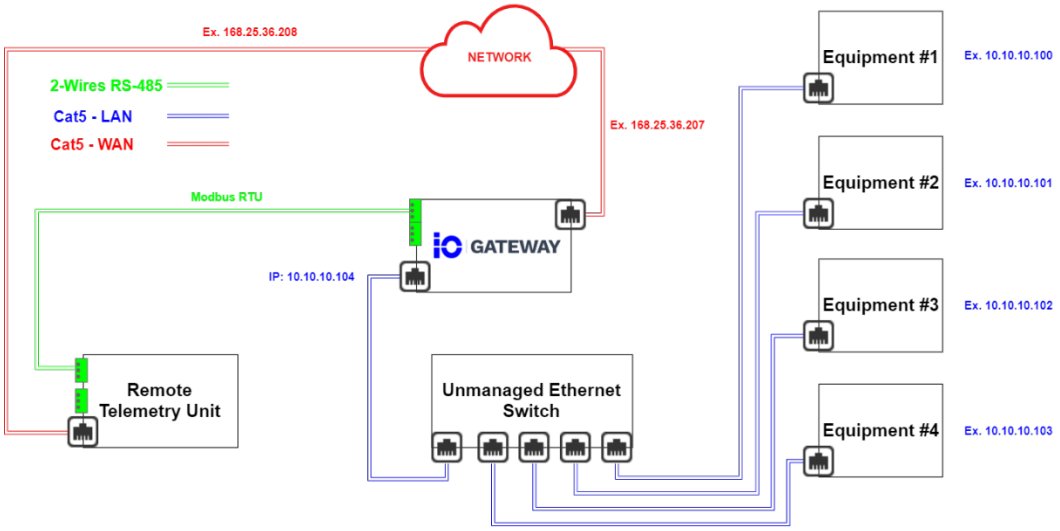

Configure an RS-485 connection between iO Gateway and an RTU/FUSION:

1. Click on **Settings**
2. Click on **Connections**
3. **RS-485 – COM A**
4. Protocol: Modbus RTU
5. Adjust the Baudrate to the Baudrate of the RTU.
6. Adjust Data Bits to the Data Bits of the RTU.
7. Adjust Stop Bits to the Stop Bits of the RTU.
8. Adjust Parity to the Parity of the RTU.
9. Click on Save

Figure 22 – RS-485 COM A Interface

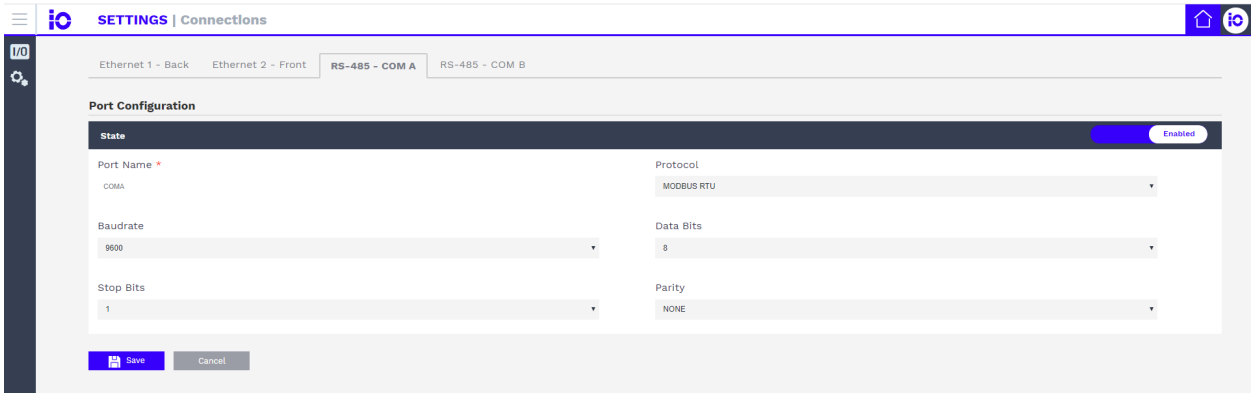

At this point, the ethernet and RS-485 ports are configured and can be used to monitor and report data points.

4.3 PROTOCOLS

This section will cover the access protocols that are found in iO Gateway. It can be accessed by clicking on **Settings - Protocols**

4.3.1 HTTP/HTTPS

Multitel doesn't recommend to use HTTP and HTTPS at the same time. Both are however enabled as factory settings. One of the two web protocols should be disabled.

4.3.2 PING

The user needs to make sure that the PING is enabled.

4.3.3 MODBUS

The Modbus section is used to configure the Modbus RTU Slave ID. This Slave ID is going to be used by the FUSION/RTU to monitor the iO Gateway.

Configuring the Modbus Slave ID:

1. Click on **Settings**
2. Click on **Protocols.**
3. **Modbus**
4. Click on Enable
5. Enter the Slave ID.
6. Click on Save

Figure 23 – Modbus Protocol Interface

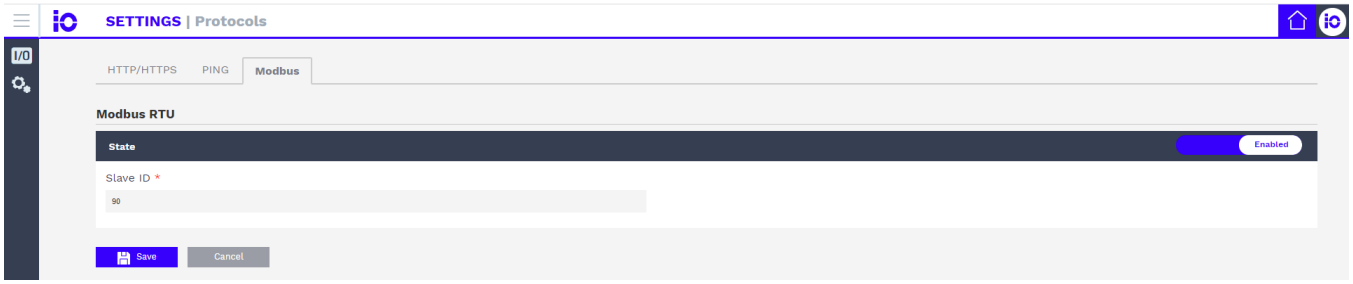

4.4 CATEGORIES AND MODELS

Categories and models are used during the equipment creation. This section will cover how categories and models can be created it can be accessed by clicking on **Settings – Categories and Models.**

4.4.1 CATEGORY

Create a new category.

1. Click on **Settings**
2. Click on **Categories and Models.**
3. Click on + Category
4. Enter a Category Name
5. Enter a Note
6. Click on Save

Figure 24 – New Equipment Category Interface

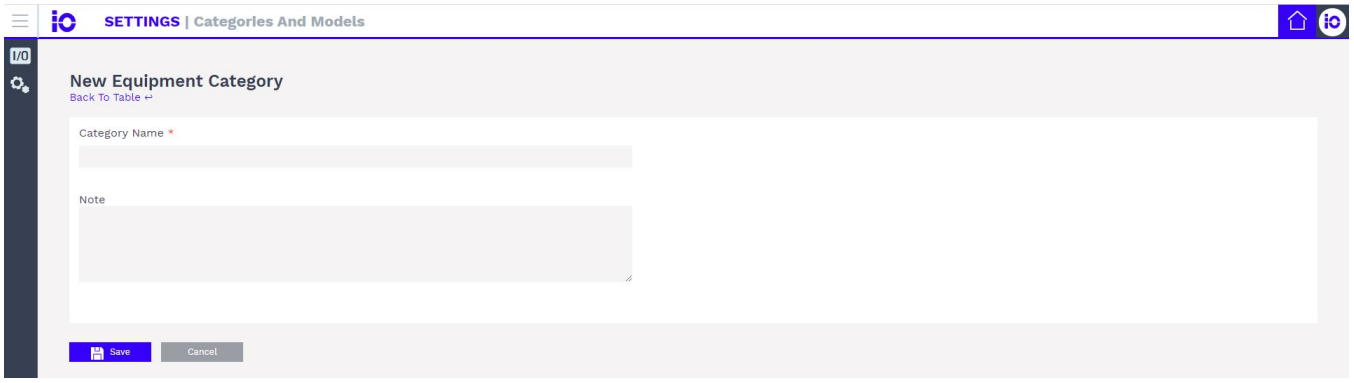

4.4.2 MODEL

Create a new model.

1. Click on **Settings**
2. Click on **Categories and Models.**
3. Click on + Model
4. Enter a Model Name
5. Enter a Manufacturer
6. Assign the Model to a Category
7. Click on Save

Figure 25 – New Equipment Model Interface

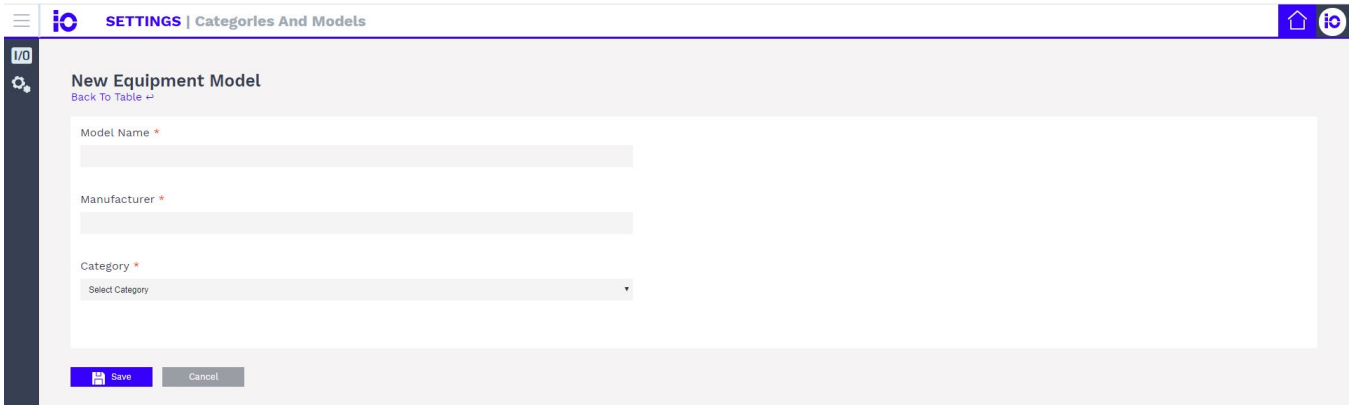

4.5 DATA SOURCE

The data source is the main section of the iO Gateway. Particular attention needs to be paid to this section. Comprehension of the different ways that iO Gateway is able to monitor equipment is primordial.
The goal of iO Gateway is to monitor data points from an equipment and expose those data points to an RTU. The overall procedure can be divided into two steps. The first step consists of equipment and data points creation. The second step is the binding between the iO Gateway and the RTU.

4.6 IO GATEWAY MONITORING CAPABILITIES

As stated earlier, the iO Gateway is a Multi-Protocol gateway capable of dealing with multiple types of equipment at the same time. iO Gateway supports both Modbus TCP/IP - Client, SNMP GET and Modbus RTU – Slave. The goal of the iO Gateway is to increase the monitoring capabilities of RTU by enabling them to connect to pieces of equipment that don't support their RTUs communication protocols.

iO Gateway supports two different gateway modes. These modes are called: Standard Mode and Transparent Mode. Please note that Modbus TCP/IP is the only protocol that can support the transparent mode.

4.6.1 STANDARD MODE

The standard mode is the most time consuming of the two but can be very useful in a troubleshooting scenario. The standard mode is also the only one that displays monitored data points on iO Gateway Data Source | Dashboard. The standard mode consists of a two-step mapping process. The first step requires the user to map a register or OID from an Equipment to an iO Gateway internal Modbus Register. iO Gateway Modbus Registers can then be used by the FUSION/RTU to monitor the iO Gateway.

4.6.2 TRANSPARENT MODE

The transparent mode is the easiest way of dealing with Modbus TCP/IP based equipment because it requires no mapping of register or OID between the iO Gateway and the equipment. The transparent mode should always be used when dealing with Modbus TCP/IP equipment. The transparent mode requires a very low amount of configuration on the iO Gateway part but will require the same amount of configuration on the FUSION/RTU.

The data source configuration for both protocols and modes have been divided in two steps:

Figure 26 – iO Gateway – Monitoring Architecture

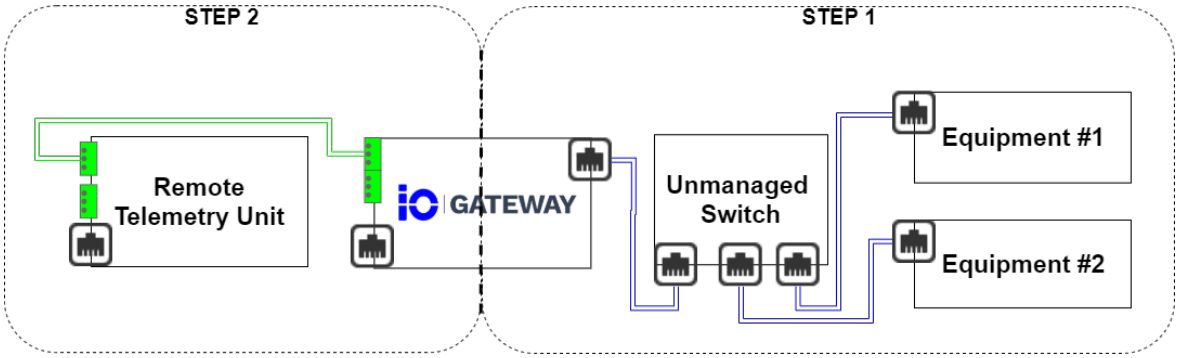

Step 1 – Equipment and Data Points creation

Step 1.2 and 1.3 will cover the Modbus TCP/IP – Standard Mode configuration

Step 1.4 and 1.5 will cover the Modbus TCP/IP – Transparent Mode configuration

Step 1.6 to 1.8 will cover the SNMP GET configuration

Figure 27 – Step 1

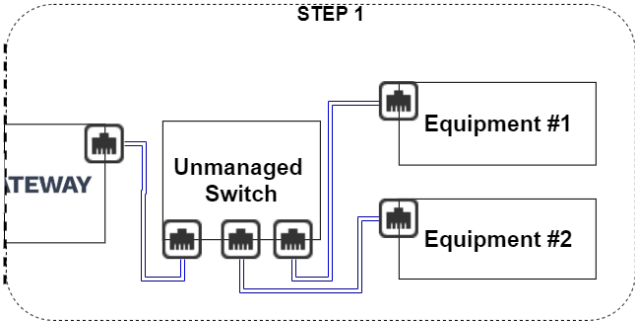

1. Click on **I/O**
2. Click on **+ Equipment**

Step 1.1 – Equipment Creation

1. Enter Equipment Name
2. Smart Equipment (Yes)
3. Select Communication Protocol (Modus TCP/IP – Client, SNMP GET)
4. Select Equipment Category (More categories can be added, see section 3.4.7.1)
5. Select Equipment Model (More models can be added, see section 3.4.7.2)
6. The manufacturer field will be filled automatically based on the equipment model.

Figure 28 – Equipment Creation Interface

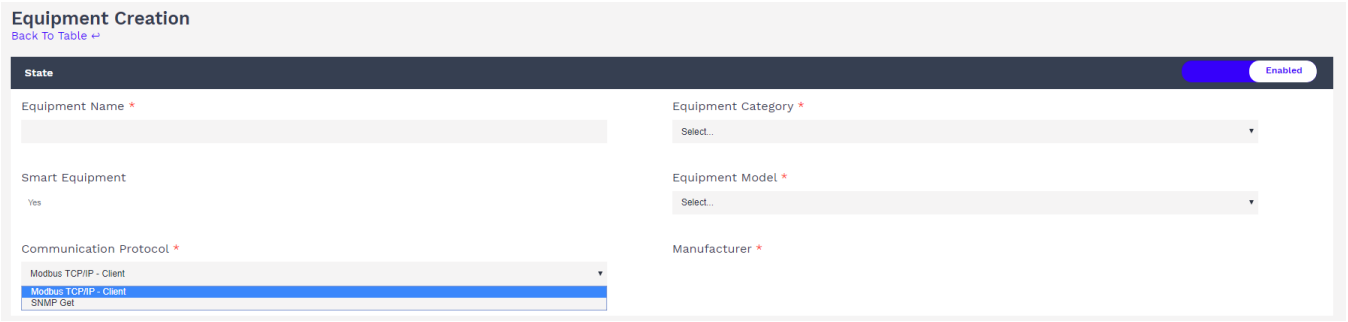

Step 1.2 – Communication Protocol – Modbus TCP/IP – Standard Mode

Figure 29 – Standard Mode

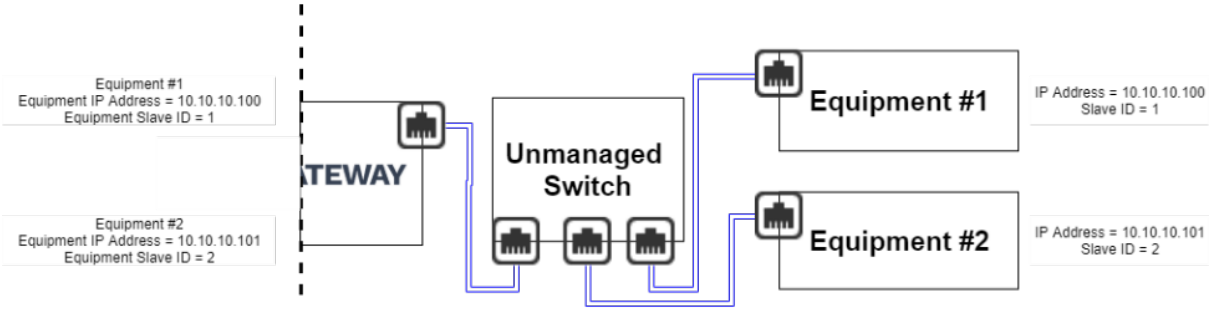

1. Select Gateway mode – Standard Mode
2. Enter Equipment Slave ID
3. Enter Equipment IP Address
4. Enter Port Number (502 default value for Modbus TCP/IP)
5. Select Register Order (Lower Address/Higher Address)
6. Select Register Base Address (Use given address/Substrat 1 from given address)
7. Select Equipment Polling Rate (1 sec, 15 sec, 30 sec, 1 min, 5 min, 15 min)
8. Select Equipment Time Out (1 sec, 2 sec, 3 sec, 4 sec, 5 sec)
9. Click on Save

Figure 30 – Modbus TCP/IP - Standard Mode Equipment Interface

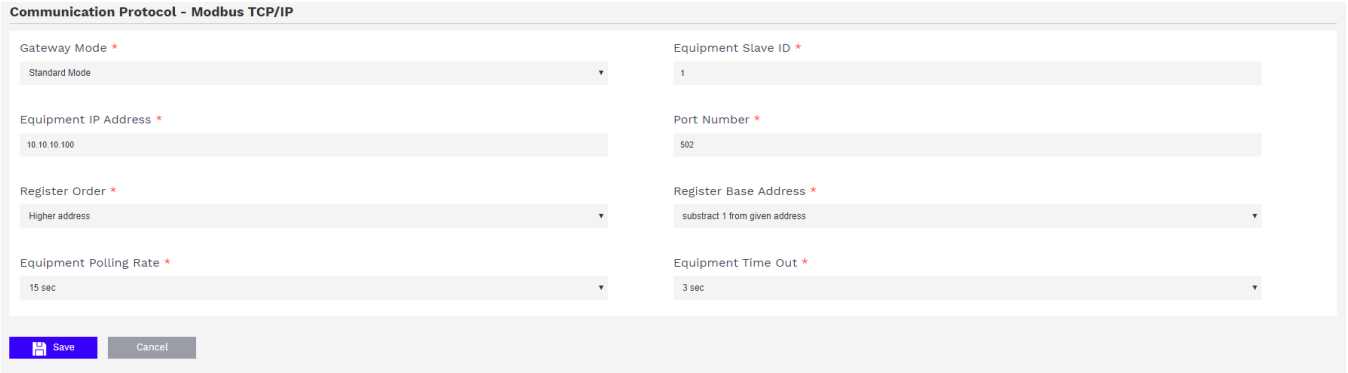

Step 1.3 – Data Points – Modbus TCP/IP – Standard Mode

The equipment that has been created can be found in the **Data Sources | Dashboard** section

Figure 31 – Modbus TCP/IP - Standard Mode Equipment in Data Source / Dashboard Interface

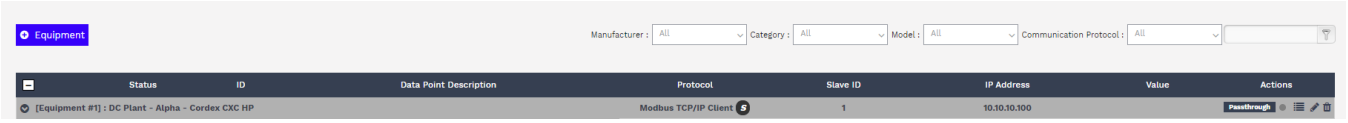

1. Click on List Data Points icon
2. Click on Add Data Point
3. Enter Data Point Description
4. Enter Equipment Modbus Register
5. Select Register Type (Holding Register, Input Register)
6. Data Type (16-bit integer, 32-bit integer, 32-bit float)
7. Select Unit
8. Select Decimal
9. Click on Pull Data
10. Repeat the process for other data points.
11. Click on Finish

Figure 32 – Modbus TCP/IP – Standard Mode List Data Points Interface

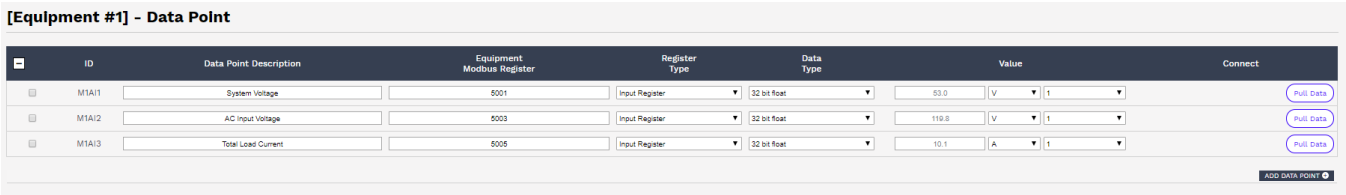

Figure 33 – Data source / Dashboard with Data Points Interface

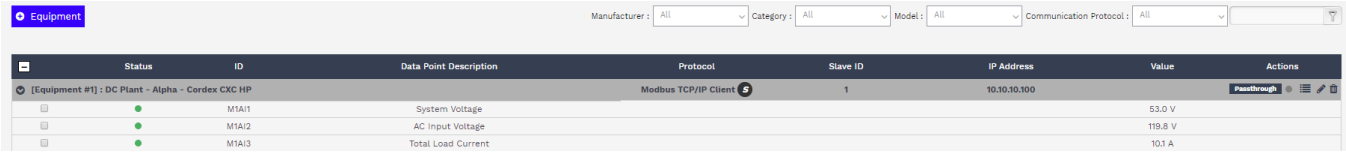

Step 1.4 – Communication Protocol – Modbus TCP/IP – Transparent Mode

Figure 34– Transparent Mode

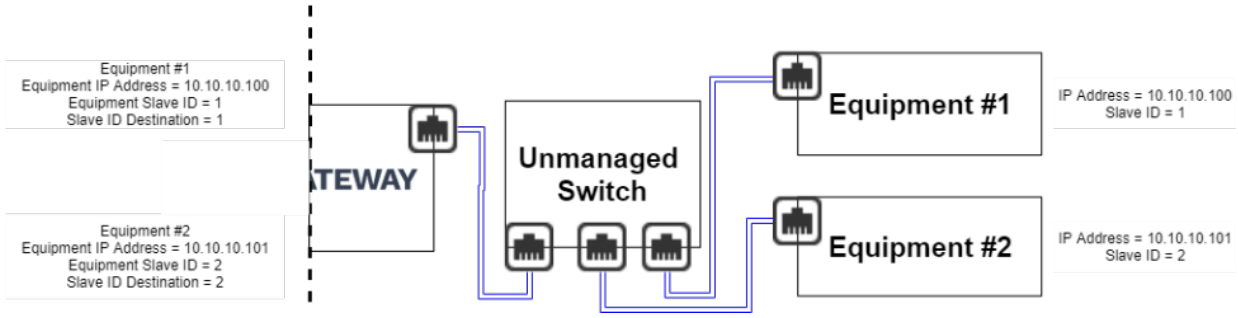

1. Select Gateway mode – Transparent Mode
2. Enter Equipment Slave ID
3. Enter Equipment IP Address
4. Enter Port Number (502 default value for Modbus TCP/IP)
5. Select Equipment Polling Rate (1 sec, 15 sec, 30 sec, 1 min, 5 min, 15 min)
6. Select Equipment Time Out (1 sec, 2 sec, 3 sec, 4 sec, 5 sec)
7. Enter Slave ID Destination
8. Click on Save

Figure 35 – Modbus TCP/IP - Transparent Mode Equipment Interface

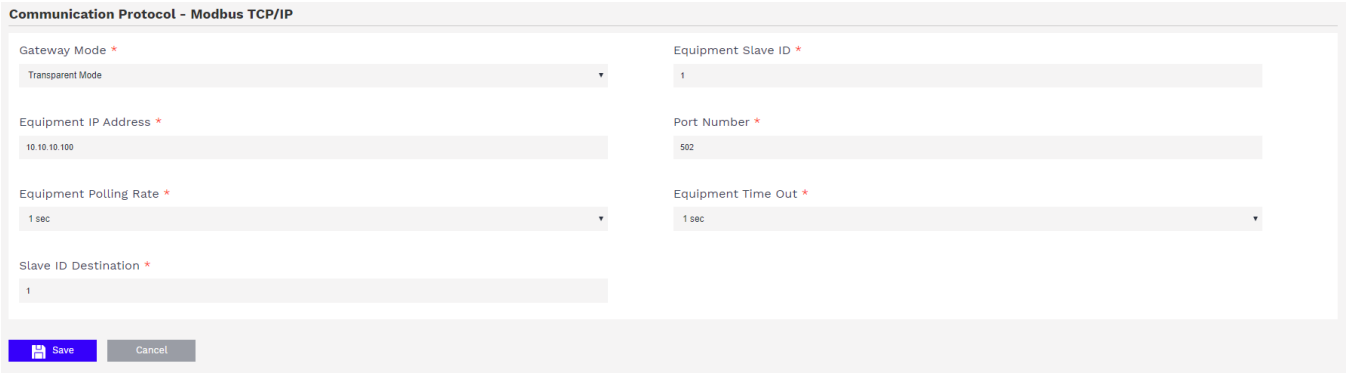

Step 1.5 – Data Points – Modbus TCP/IP – Transparent Mode

The equipment that has been created can be found in the **Data Sources | Dashboard** section

Figure 36 –Modbus TCP/IP – Transparent Mode Equipment in Data Source / Dashboard Interface

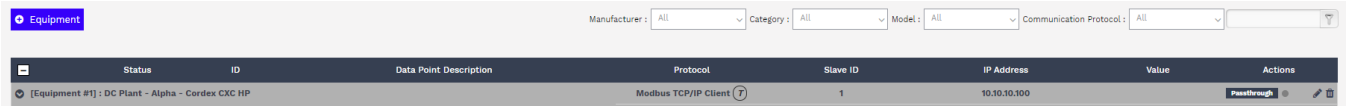

IMPORTANT NOTE:

There is no data points configuration in transparent mode.

Step 1.6 – Communication Protocol – SNMP GET

Figure 37 –SNMP

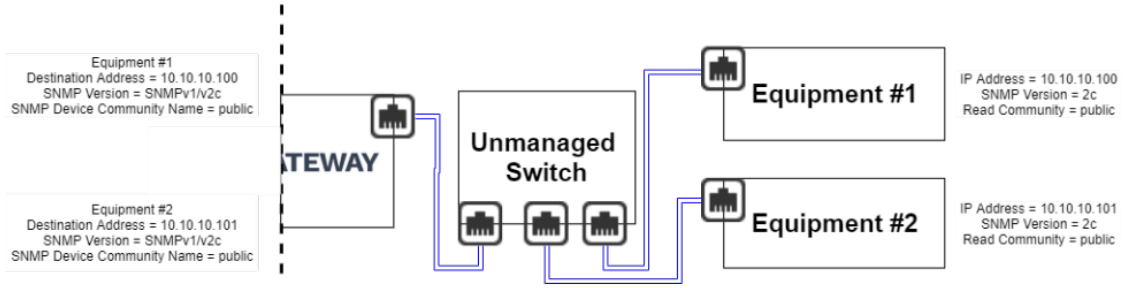

1. Enter Destination Address
2. Select SNMP Version (V1/V2C, V3)

3. Enter Constant Part of OID (not mandatory)
4. Enter SNMP Device Community Name
5. Select Equipment Polling Rate (1 sec, 15 sec, 30 sec, 1 min, 5 min, 15 min)
6. Select Equipment Time Out (1 sec, 2 sec, 3 sec, 4 sec, 5 sec)
7. Enter Port Number (161 default value for SNMP GET)
8. Click on Save

Figure 38– SNMP Get v1/v2c Equipment Creation Interface

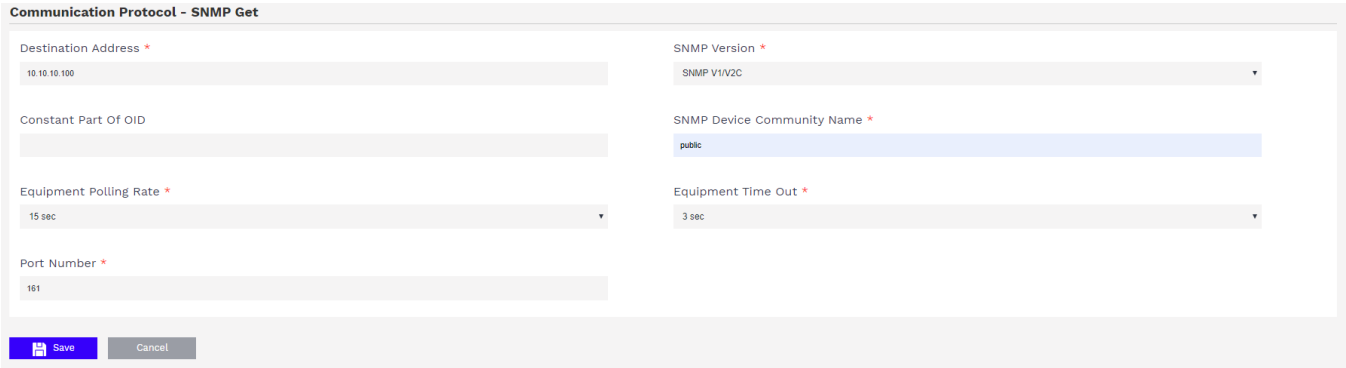

If SNMP V3 has been selected further configuration needs to be done.

Step 1.7 – Communication Protocol – SNMP GET V3

1. Enter Username
2. Enter Default Context Name
3. Select Security Level (No authentication, No privacy/ Authentication, No Privacy/ Authentication, Privacy)
4. Select Authentication Protocol (MD5, SHA1)
5. Enter Authentication Password
6. Select Privacy Protocol (DES, AES)
7. Enter Privacy Password
8. Click on Save

Figure 39 –SNMP Get v3 Equipment Creation Interface

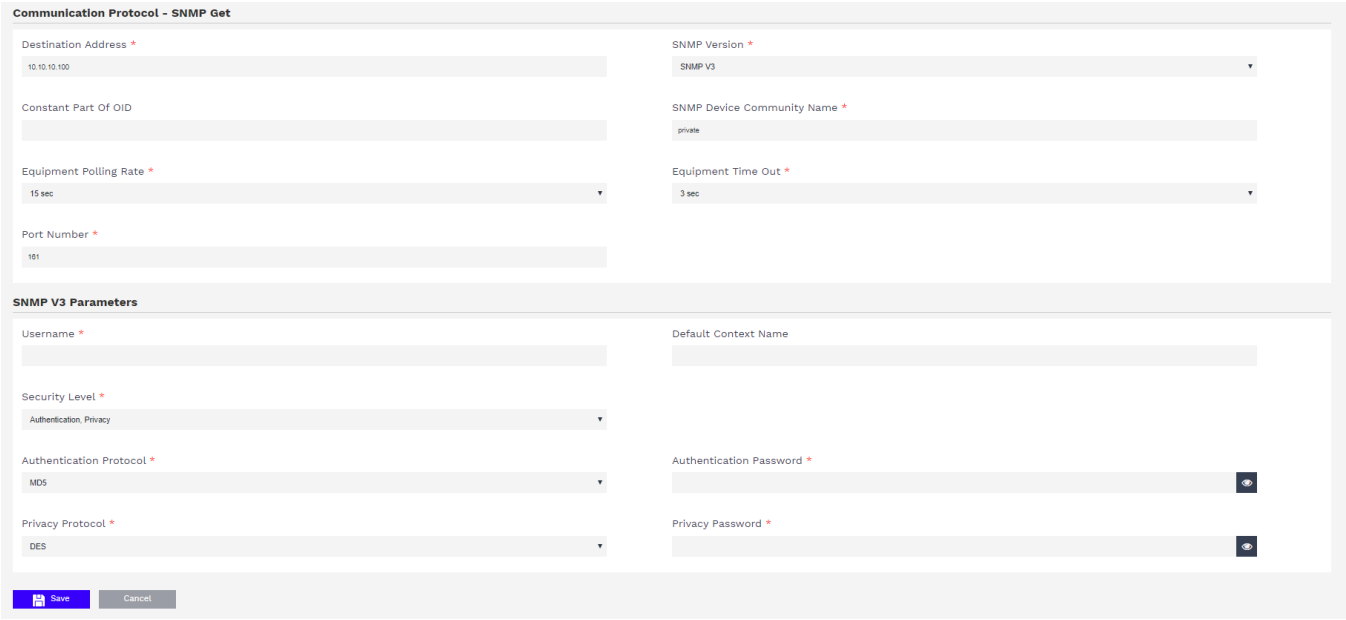

Step 1.8 – Data Points – SNMP GET

The equipment that has been created can be found in the **Data Sources | Dashboard** section

Figure 40 –SNMP Get Equipment in Data Source / Dashboard Interface

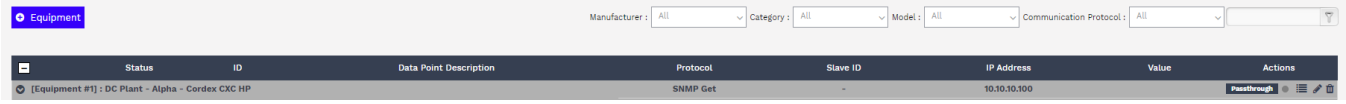

1. Click on List Data Points icon
2. Click on Add Data Point
3. Enter Data Point Description
4. Constant Part of OID will be displayed in the Equipment SNMP OID section
5. Enter Equipment SNMP OID
6. Enter Factor
7. Enter Offset
8. Select Unit
9. Select Decimal
10. Click on Pull Data

11. If this data point is configured properly, the user should see the following message ‘’Data point successfully saved’’ Repeat the process for other data points.
12. Click on Finish

Figure 41– SNMP Get Data Point Interface

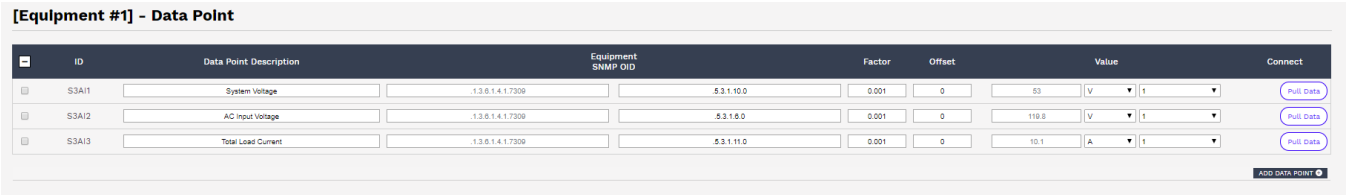

Figure 42 –Data source / Dashboard with SNMP Get Data Point Interface

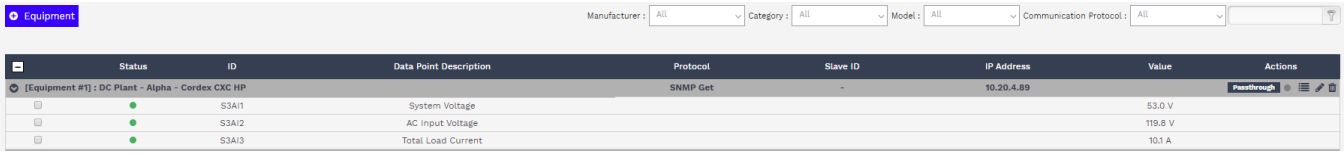

Step 2 – RTU and iO Gateway

Figure 43 – Serial

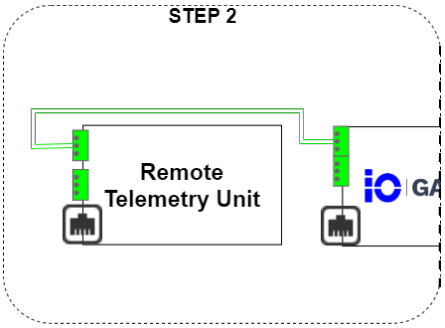

Step 2.1 – Modbus TCP/IP – Standard Mode

Step 2.1.1 – iO Gateway Modbus Register

1. Click on List Data Points icon
2. Select a data point
3. Click on Advanced
4. Enter iO Modbus Register

5. Click on Save

Repeat the process for every data point.

Figure 44 – Modbus RTU Advanced Option Interface

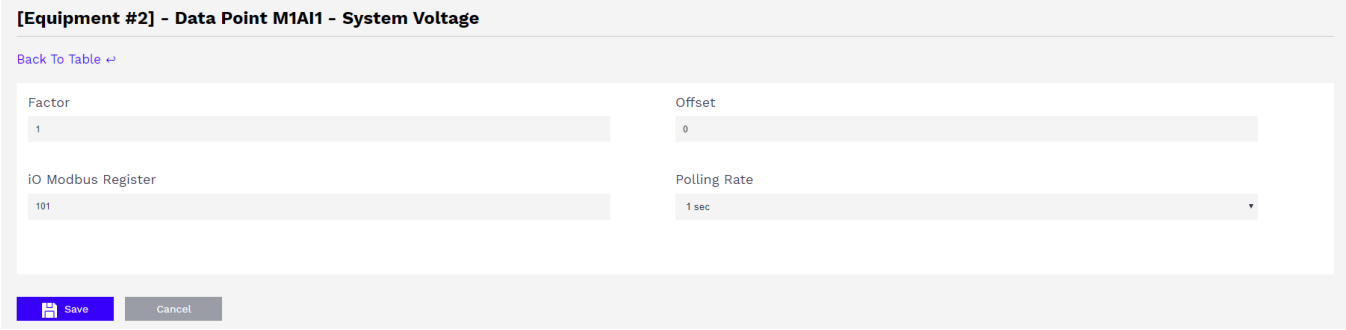

Table 10 – Standard Mode – Modbus Register Mapping

iO Gateway Modbus Register	Equipment #1 Register
101	5001
103	5003
105	5005

iO Gateway Modbus Register	Equipment #2 Register
201	5001
203	5003
205	5005

Step 2.1.2 – RTU and iO Gateway Binding – Modbus TCP/IP – Standard Mode

1. Go into RTU web interfaces
2. The RTU needs to use Modbus RTU – Master to get data points from the iO Gateway.
3. Create a module or a device to bind the iO Gateway and the RTU.
4. Enter Slave ID of the iO Gateway (see section 3.4.6.3)

Figure45– RTU – Standard Mode – Module Configuration

5. Create a data point on the RTU

6. Use the iO Modbus Register as the Modbus Register

Figure 46– RTU – Standard Mode – Data Point Configuration

Modules Edit

M1A1	Value
The channel state is	Enabled
The name is	System Voltage
The measure unit is	V
The number of decimal digits is (4 = auto)	1
The bits for the mask used to extract value is	None
The strings associated to each code is	Not Programmed
The register address is	101

Once the data point is created the RTU will start to monitor the iO Gateway

Figure 47 – RTU – Standard Mode – Data Point Monitoring

Module 1 - Modbus TCP - Standard

Mnemonic	Channel Name	Value
M1A1	System Voltage	53.0 V

Step 2.2 – Modbus TCP/IP – Transparent Mode

Step 2.1.1 – iO Gateway Modbus Register

No internal mapping is required when using the transparent mode

Step 2.1.2 – RTU and iO Gateway Binding – Modbus TCP/IP – Transparent Mode

1. Go into RTU web interfaces
2. The RTU needs to use Modbus RTU – Master to get data points from the iO Gateway.
3. Create a module or a device to bind the iO Gateway and the RTU.
4. Enter the Slave ID of the Slave ID destination and not the iO Gateway Slave ID.

Figure 48 – Equipment – Transparent Mode

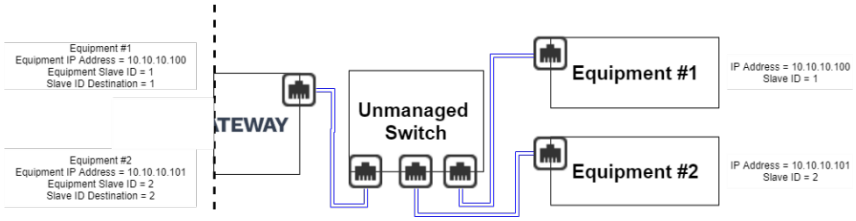

Figure 49 – RTU – Transparent Mode – Module Configuration

Modules Edit

M2	Value
The module state is	Enabled
The name is	Modbus TCP - Transparent
The slave ID is	1

In transparent mode, the Slave ID Destination is the Slave ID that the user needs to use in the RTU. Since there is no mapping of Modbus Register, the iO Gateway expose every Modbus registers. Since equipment can have the same Modbus registers, the Slave ID destination is used to make a distinction between each Modbus Registers.

1. Create a data point on the RTU
2. Use the Modbus Register from the equipment itself

Figure 50– RTU – Transparent Mode – Data Point Configuration

Modules Edit

M2A1	Value
The channel state is	Enabled
The name is	System Voltage
The measure unit is	V
The number of decimal digits is (4 = auto)	1
The bits for the mask used to extract value is	None
The strings associated to each code is	Not Programmed
The register address is	5001

Once the data point is created the RTU will start to monitor the iO Gateway

Figure 51– Transparent Mode – Data Point Monitoring

Module 2 - Modbus TCP - Transparent

Mnemonic	Channel Name	Value
M2A1	System Voltage	53.0 V

Step 2.3 – SNMP GET

Step 2.3.1 – iO Gateway Modbus Register

1. Click on List Data Points icon
2. Select a data point
3. Click on Advanced
4. Select Register Datatype (16-bit integer, 32-bit integer, 32-bit float)
5. Select Register Type (Holding Register, Input Register)
6. Enter iO Modbus Register
7. Click on Save
8. Repeat the process for every data point.

Figure 52 – SNMP Advanced Option Interface

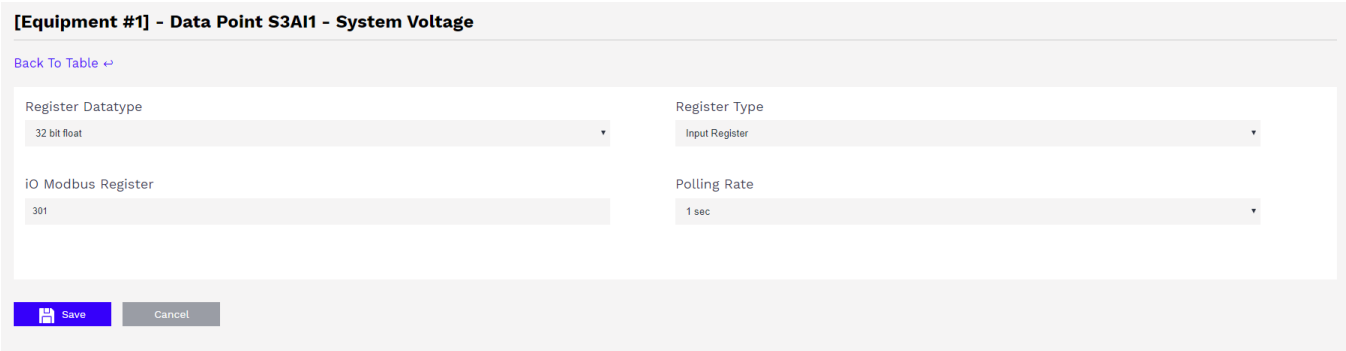

Table 11 – SNMP GET – Register/OID Mapping

iO Gateway Modbus Register	Equipment #1 SNMP OID
301	.1.3.6.1.4.1.7309.5.3.1.10.0
303	.1.3.6.1.4.1.7309.5.3.1.6.0
305	.1.3.6.1.4.1.7309.5.3.1.11.0

iO Gateway Modbus Register	Equipment #2 SNMP OID
401	.1.3.6.1.4.1.7309.5.3.1.10.0
403	.1.3.6.1.4.1.7309.5.3.1.6.0
405	.1.3.6.1.4.1.7309.5.3.1.11.0

Step 2.3.2 – RTU and iO Gateway Binding – SNMP GET

1. Go into RTU web interfaces
2. The RTU needs to use Modbus RTU – Master to get data points from the iO Gateway.
3. Create a module or a device to bind the iO Gateway and the RTU.
4. Enter Slave ID of the iO Gateway (see section 3.4.6.3)

Figure 53– RTU – SNMP GET – Module Configuration

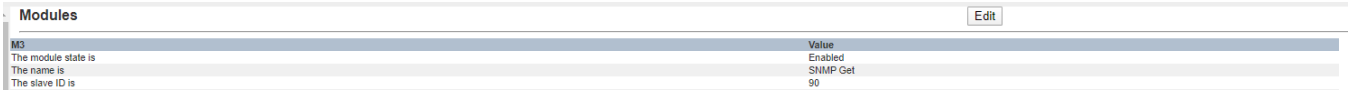

5. Create a data point on the RTU
6. Use the iO Modbus Register as the Modbus Register

Figure 54– RTU – SNMP GET – Data Point Configuration

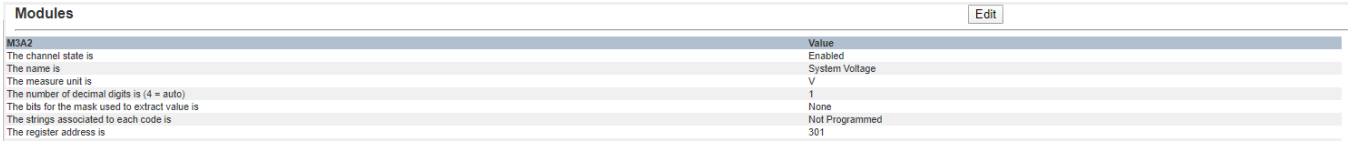

Modules

Edit

M3A2	Value
The channel state is	Enabled
The name is	System Voltage
The measure unit is	V
The number of decimal digits is (4 = auto)	1
The bits for the mask used to extract value is	None
The strings associated to each code is	Not Programmed
The register address is	301

Once the data point is created the RTU will start to monitor the iO Gateway

Figure 55 – RTU – SNMP GET – Data Point Monitoring

Module 3 - SNMP Get

Mnemonic	Channel Name	Value
M3A1	Up Time	457904 s
M3A2	System Voltage	53.0 V

4.7 PASSTHROUGH

Passthrough enables the user to access remotely to equipment web interfaces that are connected to the LAN with the iO Gateway. In order words, the passthrough is able to get access to the LAN via the WAN.

There are two ways to configure a passthrough link, the user can either go to **Settings** and click on **Passthrough** or click on the passthrough icon on the equipment in the **Data Sources | Dashboard.** The Passthrough section will display the Name of the equipment, the passthrough status, the HTTPS connection status, the Equipment IP address and the Port Number.

Figure 56 – Passthrough Interface

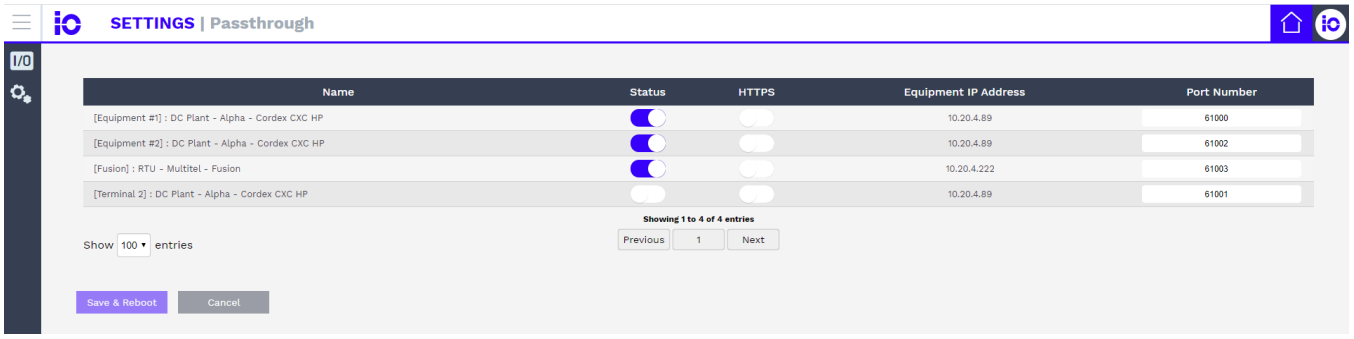

SETTINGS | Passthrough

I/O

Name	Status	HTTPS	Equipment IP Address	Port Number
[Equipment #1] : DC Plant - Alpha - Cordex CXC HP			10.20.4.89	61000
[Equipment #2] : DC Plant - Alpha - Cordex CXC HP			10.20.4.89	61002
[Fusion] : RTU - Multitel - Fusion			10.20.4.222	61003
[Terminal 2] : DC Plant - Alpha - Cordex CXC HP			10.20.4.89	61001

Showing 1 to 4 of 4 entries

Show 100 entries

Previous 1 Next

Save & Reboot Cancel

A passthrough link will be generated each time equipment is created. The passthrough status is always disabled and needs to be enabled in order to access the feature. To enable the feature, the user needs to click on the status icon and make sure that the icon is blue. Once the status turns blue the user will need to save & reboot before the passthrough can be used.

Figure 57 – Save & Reboot Confirmation

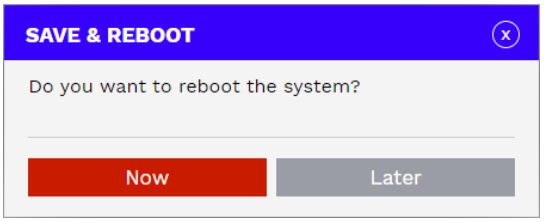

Once the iO Gateway is rebooted, the passthrough link of the equipment will become blue.

Figure 58 – Passthrough Activated in Data Source/Dashboard

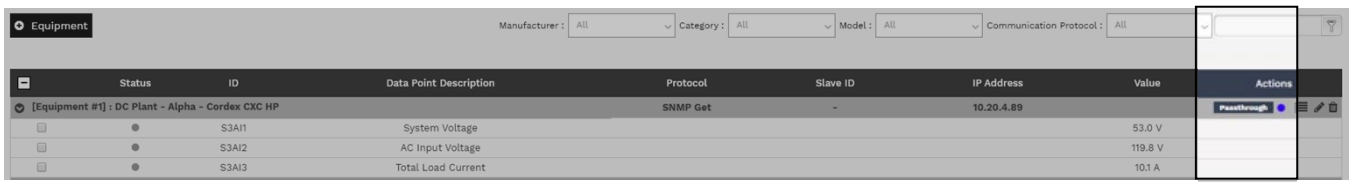

The user can click on the blue icon to access the equipment web interfaces.

If the equipment supports HTTPS, a secured passthrough link can be configured by enabling the HTTPS status. Passthrough port number can also be configured but it is recommended to use the default port number.